USE AND MAINTENANCE MANUAL

A201001

EN

ORIGINAL
INSTRUCTIONS
Doc. 10047904
Ver. AB

ISOPLAM S.R.L.
Via E. Mattei, 4 – Z. I. Maser (TV) – Italy
Tel. (+39) 0423 925023 - www.isoplam.it
Company certified UNI EN ISO 9001:2015

The descriptions contained in this document are not binding.
The company therefore reserves the right to make any modifications at any time to elements, details, or accessory supply, as considered necessary for reasons of improvement or manufacturing/commercial requirements.
The reproduction, even partial, of the text and drawings contained in this document is prohibited by law.

The company reserves the right to make any technical and/or supply modifications. The images are shown as a reference only, and are not binding as to the actual design and/or equipment.

SYMBOLS USED IN THE MANUAL

	Open book symbol with an "i": indicates the need to consult the instruction manual.
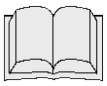	Open book symbol: used to tell the operator to read the manual before using the machine.
	Warning symbol: carefully read the sections marked with this symbol and observe the indications, for the safety of the operator and the machine.
	Warning symbol: indicates the risk of gas exhalation and leakage of corrosive liquids.
	Warning symbol: indicates the risk of fire. Do not go near with naked flames.
	Warning symbol: indicates that the packed product should be handled with suitable lifting means that comply with the legal requirements.
	Warning symbol: indicates that the packed product should be handled with suitable lifting means that comply with the legal requirements concerning suspended loads.
	Disposal symbol: when disposing of the machine, carefully read the sections marked with this symbol.

QUICK REFERENCE (ELECTRONIC DOCUMENT):

For quick reference of the electronic documents, use the Bookmarks and Link Pages:

Bookmarks:

Activate the "Bookmarks" panel of the interface browser by clicking on the relative icon (01) (the icon may vary depending on the Acrobat viewer version).

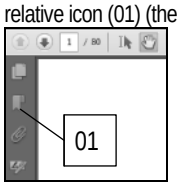

To view the desired paragraph, simply click on the title in the browser (02) that will take you to the desired destination.

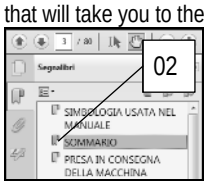

Link Page:

To view the desired paragraph in the content of the document, simply click on the title of the paragraph that will take you to the desired destination.

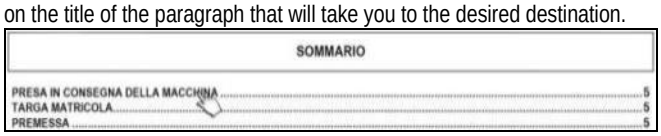

NB:

if the text directs you to a specific chapter or paragraph, you can go directly to that page by clicking on the name of the paragraph in question (the title is written in capital letters and underlined).

To return quickly to the contents of the document, simply click on the company logo at the top of this page, and it will sends you back to the desired destination.

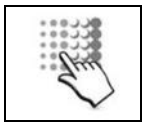

CONTENTS

ON CONSIGNMENT OF THE EQUIPMENT 4
INTRODUCTORY COMMENT 4
INTENDED USE 4
SERIAL NUMBER PLATE 4
TECHNICAL DESCRIPTION 4
SYMBOLS USED ON THE MACHINE 5
GENERAL SAFETY REGULATIONS 6
PREPARING THE MACHINE 7
1. HANDLING THE PACKED MACHINE 7
2. UNPACKING THE MACHINE 7
3. MOVING THE MACHINE 7
4. MACHINE COMPONENTS 8
5. COLLECTION TANK COMPONENTS 8
6. FLOAT COMPONENTS (FOR VACUUMING LIQUIDS) 9
7. VACUUM HEAD COMPONENTS 9
8. MACHINE SAFETY 9
9. INSERTING THE FILTER/COLLECTION BAG (OPTIONAL) 10
10. INSERTING THE NYLON FILTER (OPTIONAL) 10
11. INSERTING THE PERMANENT FABRIC FILTER (OPTIONAL) 11
12. FIXING THE FRONT SQUEEGEE KIT (OPTIONAL) 13
PREPARING TO WORK 15
13. PREPARING THE MACHINE 15
WORK 16
14. DRY VACUUM CLEANER 16
15. WET VACUUM CLEANER 17
16. WET VACUUM CLEANER WITH OPTIONAL FRONT SQUEEGEE KIT 19
17. IMPROVING THE VACUUMING CAPACITY 20
AT THE END OF THE WORK 22
DAILY MAINTENANCE 23
18. EMPTYING THE COLLECTION TANK 23
19. CLEANING THE ACCESSORIES 25
20. CLEANING THE FRONT SQUEEGEE (OPTIONAL) 25
WEEKLY MAINTENANCE 27
21. CLEANING THE COLLECTION TANK 27
22. CLEANING THE SPONGE FILTER 28
23. CLEANING THE CARTRIDGE FILTER 29
24. CLEANING THE FLOAT 30
25. CLEANING THE PERMANENT FABRIC FILTER (OPTIONAL) 31
26. CLEANING THE NYLON FILTER (OPTIONAL) 32
EXTRAORDINARY MAINTENANCE 33
27. REPLACING THE SPONGE FILTER 33
28. REPLACING THE CARTRIDGE FILTER 34
29. REPLACING THE PERMANENT FABRIC FILTER (OPTIONAL) 35
30. REPLACING THE NYLON FILTER (OPTIONAL) 36
31. REPLACING THE RUBBER BLADES OF THE FRONT SQUEEGEE (OPTIONAL) 37
TROUBLESHOOTING 39
32. THE MACHINE DOES NOT SWITCH ON 39
33. INSUFFICIENT VACUUM 39
DISPOSAL 40
CHOOSING AND USING THE ACCESSORIES 41
EC DECLARATION OF CONFORMITY 43

ISOPLAM S.R.L.
Via E. Mattei, 4 – Z. I. Maser (TV) – Italy
Tel. (+39) 0423 925023 - www.isoplam.it
Company certified UNI EN ISO 9001:2015

ON CONSIGNMENT OF THE EQUIPMENT

When the machine is consigned to the customer, an immediate check must be performed to ensure all the material mentioned in the shipping documents has been received, and also to check the machine has not suffered damage during transportation. If this is the case, the carrier must ascertain the extent of the damage at once, informing our customer service office. It is only by prompt action of this type that the missing material can be obtained, and compensation for damage successfully claimed.

INTRODUCTORY COMMENT

A201001 is a vacuum cleaner for dusts and liquids.

The machine must be used for this purpose only. Even the best machines will only work well if used correctly and kept in good working order. We therefore suggest you read this instruction booklet carefully, and read it again whenever difficulties arise while using the machine. If necessary, remember that our assistance service (organised in collaboration with our dealers) is always available for advice.

INTENDED USE

The wet/dry vacuum cleaner is designed exclusively for the professional cleaning of surfaces and floors in industrial, commercial and public environments. The machine is only suitable for use in closed - or at least covered - locations.

The machine is not suitable for use in the rain, or under water jets. It is FORBIDDEN to use the machine for picking up dangerous dusts or inflammable liquids in places with an explosive atmosphere. In addition, it is not suitable as a means of transport for people or objects.This machine must only be used for the purpose for which it was built, i.e. the cleaning of inert surfaces and the vacuum removal of solid, non-flammable and non-explosive substances. Any other use must be considered incorrect and hence dangerous. Make sure the working machine does not come too close to delicate organs like the ears, mouth, eyes, etc.

SERIAL NUMBER PLATE

The serial number plate is located on the rear of the vacuum head. It indicates the general characteristics of the machine, in particular its serial number.

The serial number is an extremely important piece of information that must always be provided when requesting assistance or purchasing spare parts.

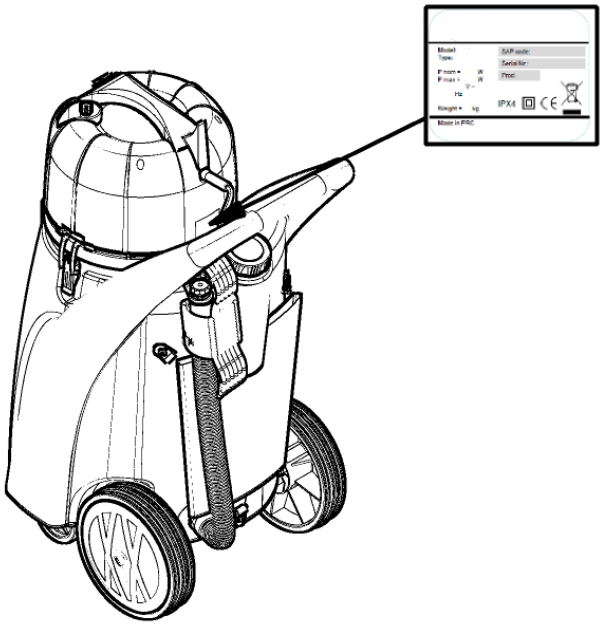

TECHNICAL DESCRIPTION	UM			**A201001**
Power supply voltage	V			230-240
Frequency	Hz			50-60
Rated power	W			1600
Type of vacuum cleaner				Wet & Dry
Number of vacuum motors				1
Vacuum	mmH_2O - kPa			25
Air flow rate	l/s – m^3/h			212
Collection tank capacity	l			80
Tank material				Polyetilene
Length of power supply cable	m			15
Dry weight	kg			19
Dimensions (LxWxH)	cm			58x95x58
Diameter of accessories	mm			40
Sound pressure level (ISO 11201)	dB (A)			<70
Uncertainty K_{pA}	dB (A)			1.5

SYMBOLS USED ON THE MACHINE

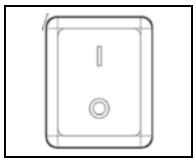

Main switch symbol.
Used on the vacuum head, to indicate the main switch.

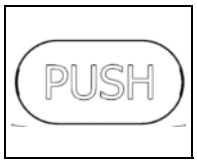

Symbol of the vacuum filter cleaning button.
Used on the vacuum head, to indicate the button for cleaning the vacuum filter.

GENERAL SAFETY REGULATIONS

The regulations below must be carefully followed in order to avoid harm to the operator and damage to the machine.
WARNING:

- Carefully read the warnings in this booklet. Keep it in a safe place for future consultation.
- The packaging elements (plastic bags, clips, etc.) are potential sources of danger and must not therefore be left within the reach of children, incompetent persons, etc.
- This machine must only be used for the purpose for which it was built, i.e. the cleaning of inert surfaces and the vacuum removal of solid, non-flammable and non-explosive substances. Any other use must be considered incorrect and hence dangerous.
- Make sure the working machine does not come too close to delicate organs like the ears, mouth, eyes, etc.
- This machine must not be used by people (including children) with reduced physical, sensorial or mental capabilities, or with no knowledge or experience, unless supervised and instructed by people responsible for their safety.
- Children must be supervised to ensure they do not play with the device.
- Read the labels on the machine carefully. Do not cover them for any reason, and replace them immediately if they become damaged.
- The machine must only be used by authorised, trained personnel.
- Do not use the machine on surfaces with an inclination greater than the one shown on the serial number plate.
- The machine is not suitable for cleaning rough or uneven floors. Do not use the machine on slopes.
- It is important to make sure the power supply cable or extension cable is not damaged by the wheels of moving vehicles, by crushing, tearing, etc. Protect the cable from heat, oil and sharp edges. Check the power cable regularly for damage, such as the formation of cracks or signs of ageing. If you notice any damage, the cable must be replaced before using the machine. If you notice any damage to the power cable, contact an authorised technical assistance centre immediately.
- In the event of danger, quickly remove the plug from the electricity socket.
- For all maintenance interventions, switch off the machine from the main switch and disconnect the power cable plug from the mains socket.
- While the machine is operating, pay attention to other people and especially to children.
- Only use the accessories supplied with the machine, or those specified in the instruction manual. The use of other accessories could compromise the safety of the machine.
- When it is not being used, the machine must not remain plugged into the electricity supply. Before carrying out any maintenance on the machine: disconnect the plug from the mains; do not immerse the machine in water; do not use solvents. The manufacturer cannot be held liable for any harm to people or animals, or damage to property, resulting from any type of use considered improper and unreasonable or anyway not complying with the above indications. When disposing of the machine, respect the regulations in force in the country of use. Do not use the vacuum cleaner with the power supply cable wound up on the cover.
- Before connecting the machine to the power supply, make sure the electric data shown on the label correspond to those of the mains supply. The machine must only be powered with a voltage of the level shown on the serial number plate.
- Make sure the working machine does not come too close to delicate organs like the ears, mouth, eyes, etc.

ATTENTION:

- The machine is not suitable for use by children and persons with reduced physical, mental and sensory capabilities, or people who lack experience and knowledge.
- The machine must not be used or stored outdoors, in damp conditions or directly exposed to rain.
- The storage temperature must be between -25°C and +55°C; do not store outdoors in damp conditions.
- Conditions of use: room temperature between 0°°C and 40°°C, with relative humidity between 30 and 95%.
- The power supply cable outlet must have an earth connection in compliance with the regulatory standards.
- Do not use the machine as a means of transport for people or objects.
- The machine does not cause harmful vibrations.
- Never vacuum gases, liquids, explosive/inflammable powders, or undiluted acids and solvents! This list includes gasoline, paint thinners and combustible oil (which, when mixed with the vacuum air, may form explosive vapours or mixtures), as well as acetone, undiluted acids and solvents, and aluminium/magnesium powders. These substances may also corrode the materials that the device is made from.
- If the device is used in dangerous areas (e.g. petrol stations), the relative safety standards must be respected. It is forbidden to use the device in environments with a potentially explosive atmosphere.
- Do not place any liquid containers on the machine.
- In the event of a fire, use a powder extinguisher. Do not use water.
- Do not knock against shelving or scaffolding, where there is a danger of falling objects. The operator must always be equipped with the appropriate safety devices (gloves, shoes, helmet, goggles, etc.).
- If the machine does not work properly, check this is not caused by failure to carry out routine maintenance. Otherwise, ask for intervention of the authorised technical assistance centre.
- If you need to replace any components, request the ORIGINAL spare parts from an Authorised dealer and/or Retailer.
- Restore all electrical connections after any maintenance interventions.
- Before using the machine, check that all the hatches and covers are positioned as shown in this Use and Maintenance Manual.Do not remove the guards that can only be removed with the aid of tools, except for maintenance work (see the relevant paragraphs).
- Do not wash the machine with direct water jets or pressurised water, nor with corrosive substances.
- Have the machine checked by an authorised technical assistance centre every year.
- When disposing of consumable materials, observe the laws and regulations in force.When your machine has reached the end of its long working life, dispose of the materials it contains in an appropriate manner, bearing in mind that it was constructed using 100% recyclable materials.

PREPARING THE MACHINE

1. HANDLING THE PACKED MACHINE

The machine is consigned in specific packaging. These packaging elements (plastic bags, clips, etc.) are potential sources of danger and must not therefore be left within the reach of children, incompetent persons, etc. The overall weight of the machine plus its packaging is 22 kg.

ATTENTION: the packaged machine must be handled in accordance with the legal regulations relating to accident prevention and the size and weight of the package itself.

The dimensions of the package are as follows:

A201001

A : 630 mm

B : 520 mm

C : 1040 mm

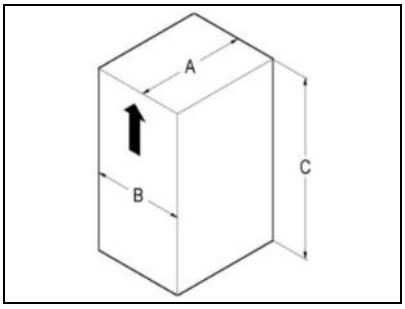

2. UNPACKING THE MACHINE

1. Open the outer cardboard box.
2. Remove the accessories from the box.
3. Remove the vacuum head from its support and rest it carefully on the ground.

ATTENTION: you are advised to always wear protective gloves, to avoid the risk of serious injury to your hands.

4. Remove the cardboard holding the vacuum head in position.
5. Remove the vacuum hose from the collection tank.
6. Take the machine out of the box, taking care not to damage either of them.

ATTENTION: you are advised to keep all the packaging elements for any future transportation of the machine.

3. MOVING THE MACHINE

1. Make sure the collection tank is empty. If this is not the case, empty it (read "EMPTYING THE COLLECTION TANK").
2. Press the button (1) in the vacuum nozzle and pull on the vacuum hose (2) to remove it from the collection tank.

ATTENTION: you are advised to always wear protective gloves, to avoid the risk of serious injury to your hands.

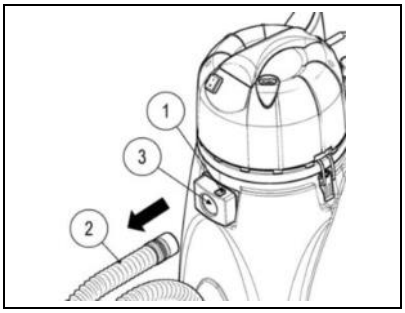

3. Insert the machine in the box, taking care not to damage either of them.Remember to place the machine wheel restraint in the bottom of the box.
4. Wind the vacuum hose around the collection tank.
5. Close the box.

4. MACHINE COMPONENTS

The standard machine components are:

1. Collection tank unit
2. Kit of floats for vacuuming liquids
3. Vacuum head unit

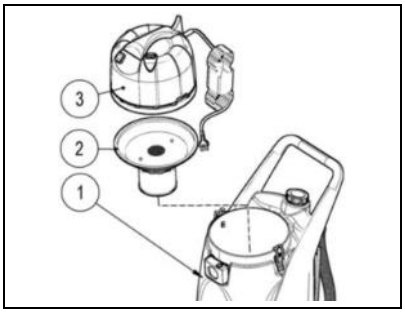

5. COLLECTION TANK COMPONENTS

The collection tank components are:

1. Rear wheels
2. Pivoting front wheels

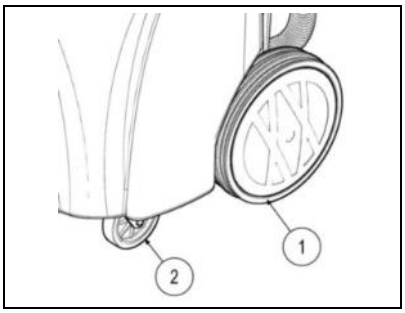

3. Vacuum nozzle
4. Vacuum hose coupling/uncoupling button
5. Collection tank
6. Vacuum head coupling/uncoupling hinges

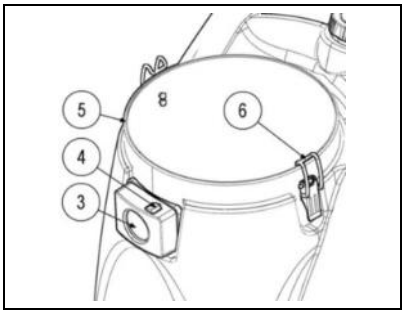

7. Exhaust pipe
8. Exhaust cap
9. Collection tank drainage cap
10. Accessory-holder pocket

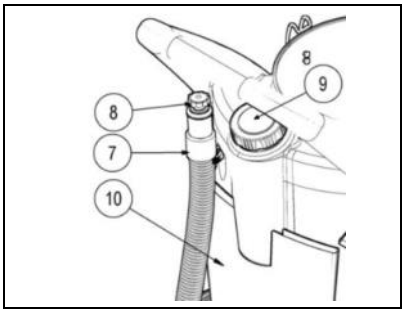

6. FLOAT COMPONENTS (FOR VACUUMING LIQUIDS)

The float kit components are:

1. Float
2. Sponge filter

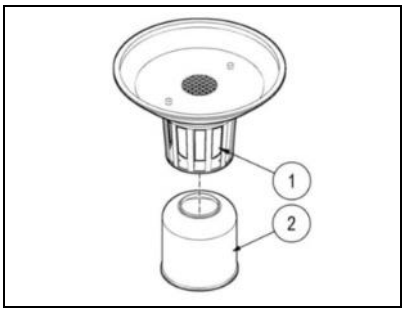

7. VACUUM HEAD COMPONENTS

The vacuum head components are:

1. Main switch
2. Vacuum head lifting handle bar
3. Vacuum filter cleaning button
4. Power supply cable
5. Power supply cable support hook

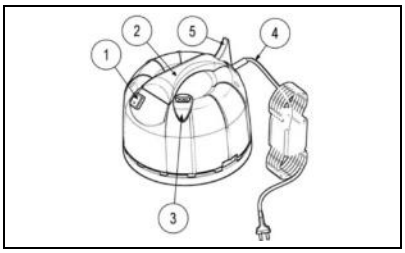

6. Vacuum filter

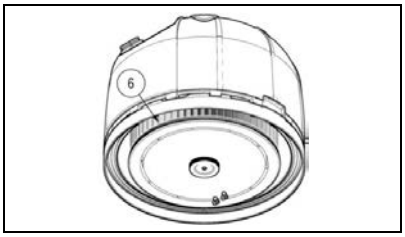

8. MACHINE SAFETY

To ensure that work is carried out in the best safety conditions, proceed as follows:

1. Make sure the collection tank is empty. If this is not the case, empty it (read "EMPTYING THE COLLECTION TANK").

   ATTENTION: the place designated for this purpose must comply with the current environmental protection regulations.

2. Make sure the main switch (1) is in the idle "0" position; if not, turn it to this position.

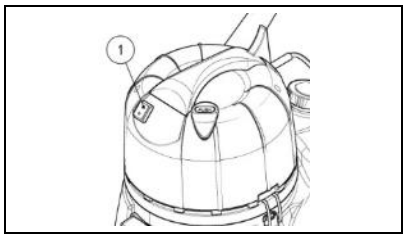

3. Make sure the plug (2) on the power supply cable (3) is disconnected from the mains socket (4). If necessary, disconnect it.

   ATTENTION: to avoid damage to the mains, disconnect the plug (2) from the socket (4) by pulling directly on the plug (2) rather than the cable (3).

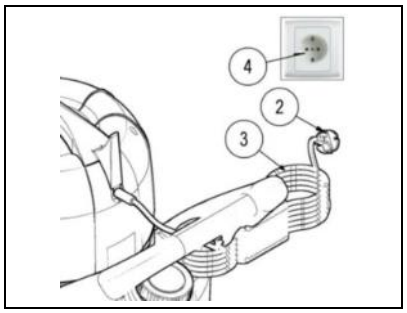

9. INSERTING THE FILTER/COLLECTION BAG (OPTIONAL)

To insert the filter/collection bag in the collection tank, proceed as follows:

1. Make sure the machine is in a safe condition (read "MACHINE SAFETY").

ATTENTION: you are advised to always wear protective gloves, to avoid the risk of serious injury to your hands.

2. Free the vacuum head from the collection tank by releasing the hooks (1) on the side of the tank. Rotate the levers as shown by the arrow in the picture on the right.

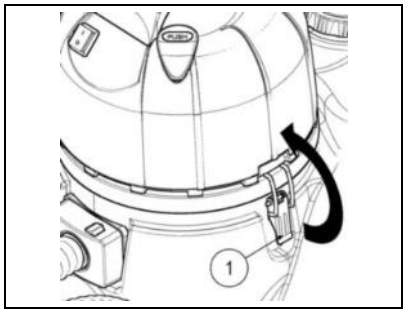

3. Use the handle (2) on the vacuum head unit to remove it from the collection tank.
4. Rest the head carefully on the ground.

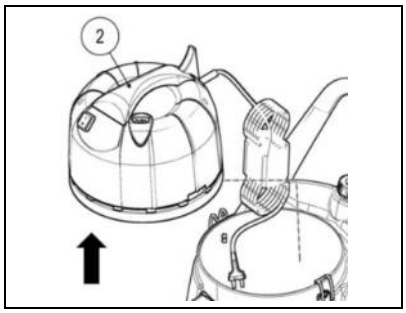

5. Insert the filter/collection bag in the collection tank, taking care to insert the filter correctly in the vacuum nozzle without damaging the cardboard support inside the bag itself.

ATTENTION: the paper filter/collection bag must only be used for collecting solid waste.

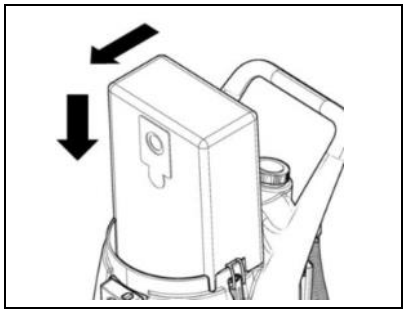

10. INSERTING THE NYLON FILTER (OPTIONAL)

To insert the nylon filter in the collection tank, proceed as follows:

1. Make sure the machine is in a safe condition (read "MACHINE SAFETY").

ATTENTION: you are advised to always wear protective gloves, to avoid the risk of serious injury to your hands.

2. Free the vacuum head from the collection tank by releasing the hooks (1) on the side of the tank. Rotate the levers as shown by the arrow in the picture on the right.

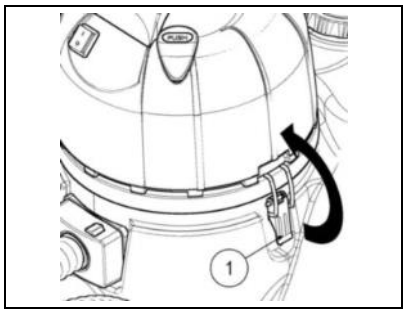

6. Use the handle (2) on the vacuum head unit to remove it from the collection tank.
7. Rest the head carefully on the ground.

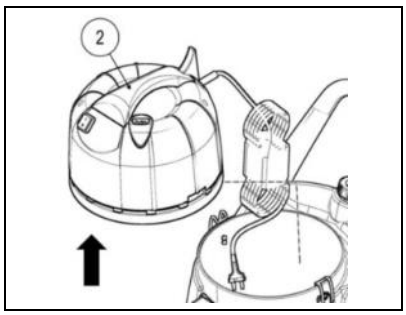

8. Insert the nylon filter (3) in the tank. To fix it in place, stick it to the edge of the tank opening.

ATTENTION: the nylon filter must only be used together with the filter/float kit or the permanent fabric filter.

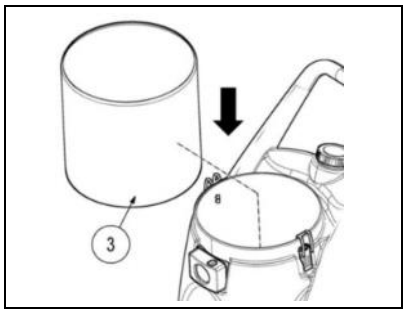

11. INSERTING THE PERMANENT FABRIC FILTER (OPTIONAL)

To insert the permanent fabric filter in the collection tank, proceed as follows:

1. Make sure the machine is in a safe condition (read "MACHINE SAFETY").

ATTENTION: you are advised to always wear protective gloves, to avoid the risk of serious injury to your hands.

2. Free the vacuum head from the collection tank by releasing the hooks (1) on the side of the tank. Rotate the levers as shown by the arrow in the picture on the right.

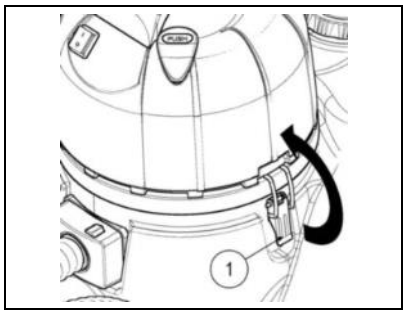

3. Use the handle (2) on the vacuum head unit to remove it from the collection tank.
4. Rest the head carefully on the ground.

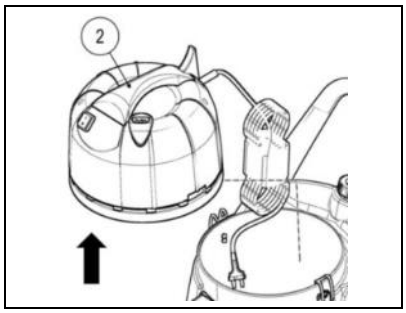

5. Insert the permanent fabric filter (3) in the tank.

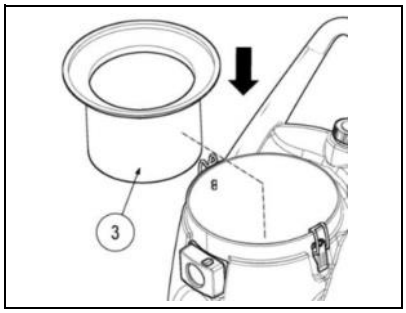

6. Insert the filter tensioner (4) in the permanent fabric filter.

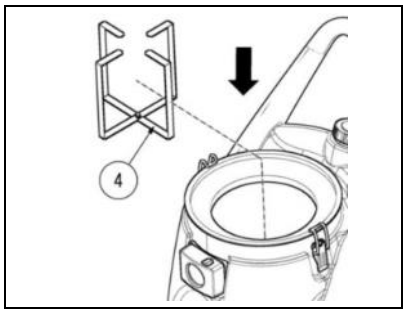

7. Use the handle (2) on the vacuum head unit to position it above the permanent fabric filter.

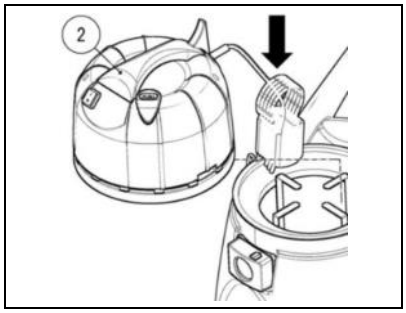

8. Fix the vacuum head to the collection tank by coupling the hooks (1) on the side of the tank. Rotate the levers as shown by the arrow in the picture on the right.

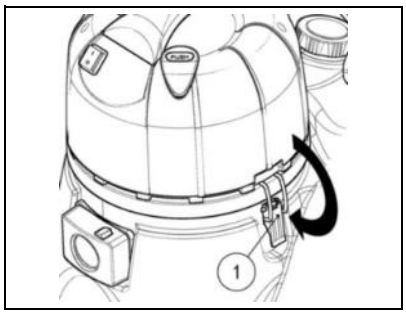

12. FIXING THE FRONT SQUEEGEE KIT (OPTIONAL)

Proceed as follows to fix the squeegee kit at the front of the machine:

1. Make sure the machine is in a safe condition (read "~~MACHINE SAFETY~~").

ATTENTION: you are advised to always wear protective gloves, to avoid the risk of serious injury to your hands.

2. Free the vacuum head from the collection tank by releasing the hooks (1) on the side of the tank. Rotate the levers as shown by the arrow in the picture on the right.

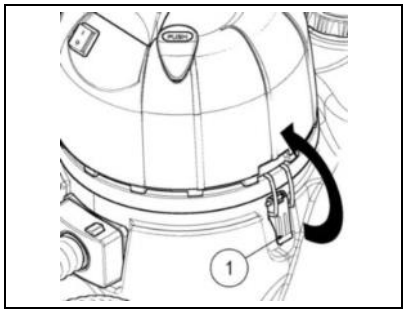

3. Use the handle (2) on the vacuum head unit to remove it from the collection tank.
4. Rest the head carefully on the ground.

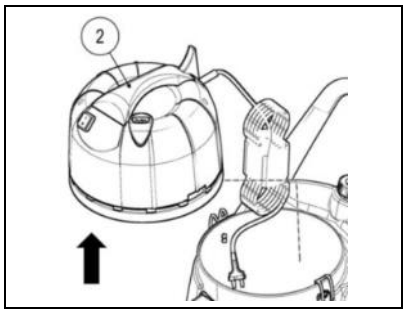

5. Using the handle, rotate the collection tank until the handle is touching the ground.

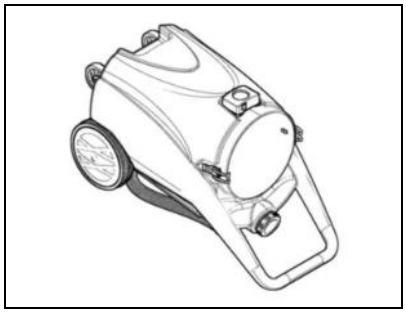

6. Take hold of the front squeegee support (3).

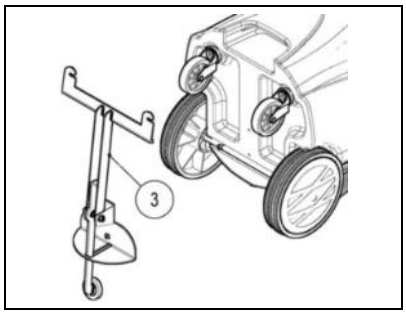

7. Use a suitable tool to fix the squeegee support (3) to the collection tank with the screws (5) and washers (4).

ATTENTION: remember to spread a bit of thread-locking fluid (medium resistance) on the threaded part of the screws before tightening them on the collection tank.

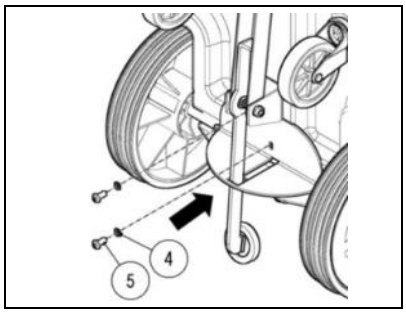

8. Take hold of the front squeegee unit (6).
9. Insert the right-hand pin (7) of the squeegee in the right-hand slot (8) of the squeegee connection.

ATTENTION: this operation can be simplified by first loosening the handwheel (9) on the pin.

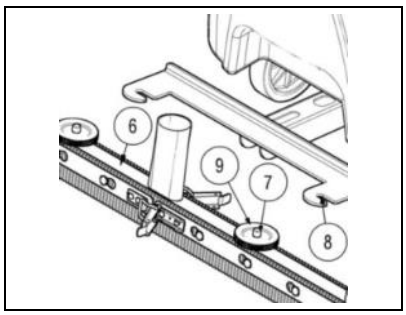

10. Repeat the same operation for the left pin.
11. Then tighten the handwheels (9) to lock the squeegee in place.
12. Finally, insert the vacuum hose (10) of the squeegee into the relative joint (11) of the vacuum nozzle.

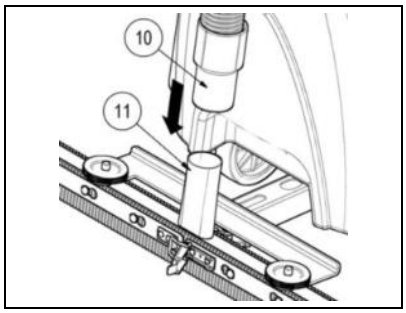

13. Press the button (12) on the vacuum nozzle.
14. Insert the vacuum hose (10) in the hole (13) on the vacuum nozzle.

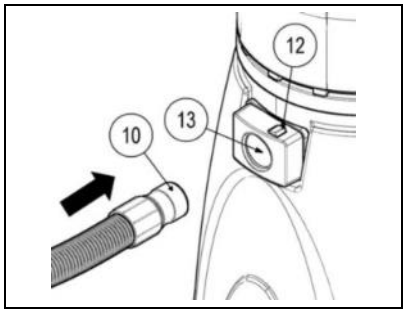

13. PREPARING THE MACHINE

Before beginning to work, it is necessary to:

1. Before use, it's important to check the good condition and working safety of the device with the work equipment (especially the power supply cable and extension cable) connected. If the conditions are not perfect, any use of the machine is forbidden.
2. Make sure the machine is in a safe condition (read "MACHINE SAFETY").

3. Press the button (1) on the vacuum nozzle.
4. Insert the vacuum hose (2) in the hole (3) on the vacuum nozzle.

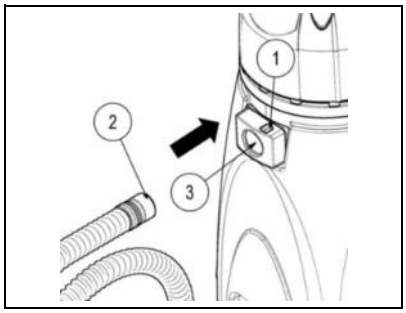

5. Select the most suitable accessory for the task to be carried out (read "CHOOSING AND USING THE ACCESSORIES").
6. Select the most suitable extension for the type of work to be carried out.

7. Insert the extension in the nozzle on the vacuum hose.
8. Connect the female part of the extension to the male part.
9. Insert the accessory.

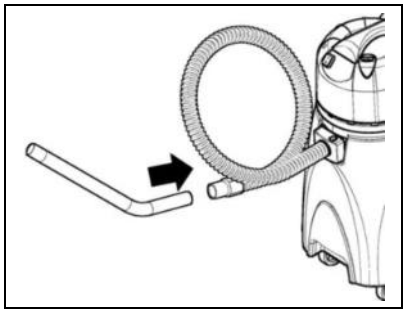

ATTENTION: never use the machine without the right filter for the type of work being carried out.

14. DRY VACUUM CLEANER

To start working, proceed as follows:

1. Make all the checks indicated in "PREPARING THE MACHINE".
2. Free the vacuum head from the collection tank by releasing the hooks (1) on the side of the tank. Rotate the levers as shown by the arrow in the picture on the right.

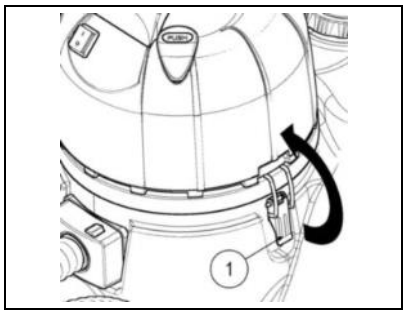

3. Use the handle (2) on the vacuum head unit to remove it from the collection tank.
4. Rest the head carefully on the ground.

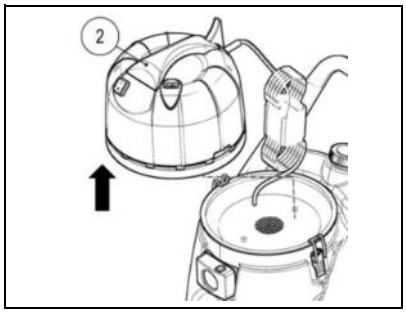

5. Remove the float unit from the collection tank.

ATTENTION: if you are using the paper filter/collection bag, read "INSERTING THE FILTER/COLLECTION BAG".

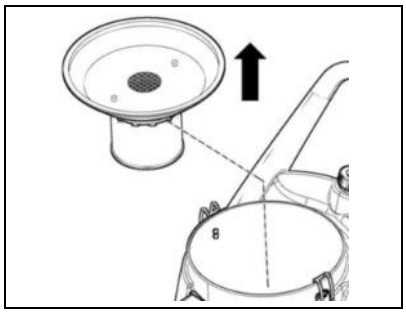

6. Use the handle (2) on the vacuum head unit to position it above the collection tank.Make sure the machine's power supply cable is in the rear part of the tank.

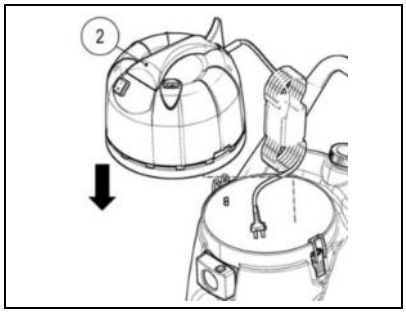

7. Fix the vacuum head to the collection tank by coupling the hooks (1) on the side of the tank. Rotate the levers as shown by the arrow in the picture on the right.

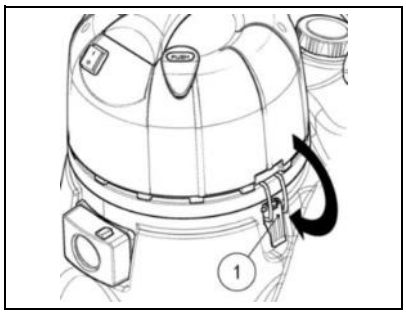

8. Insert the plug (3) of the power cable (4) in the mains socket (5).

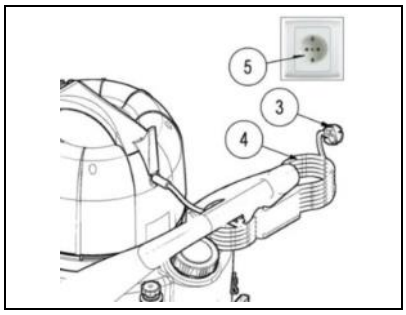

9. Switch on the machine by bringing the main switch (6) to the work position "I".
10. Carry out the cleaning work.

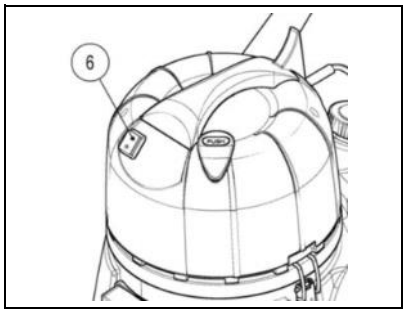

ATTENTION: if the vacuuming intensity diminishes while you are working, read "IMPROVING THE VACUUMING CAPACITY".

15. WET VACUUM CLEANER

To start working, proceed as follows:

1. Make all the checks indicated in "PREPARING THE MACHINE".
2. Free the vacuum head from the collection tank by releasing the hooks (1) on the side of the tank. Rotate the levers as shown by the arrow in the picture on the right.

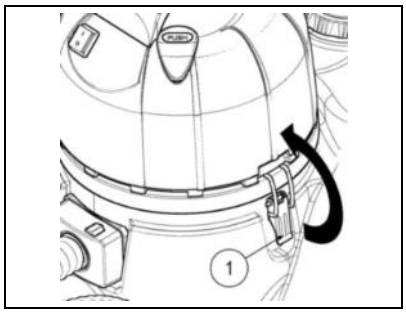

3. Use the handle (2) on the vacuum head unit to remove it from the collection tank.
4. Rest the head carefully on the ground.

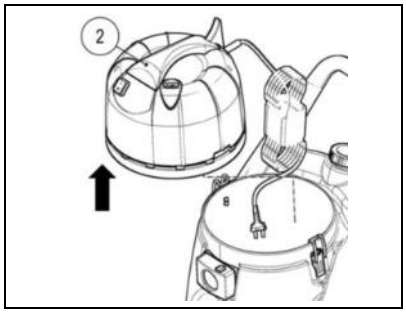

5. Make sure the float unit is inserted in the collection tank. If this is not the case, position it correctly.

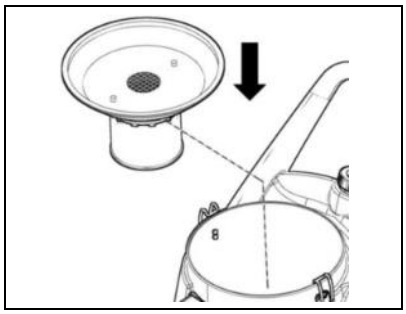

ATTENTION: there must be no solid waste residue inside the collection tank.

WORK

6. Use the handle (2) on the vacuum head unit to position it above the collection tank.Make sure the machine's power supply cable is in the rear part of the tank.

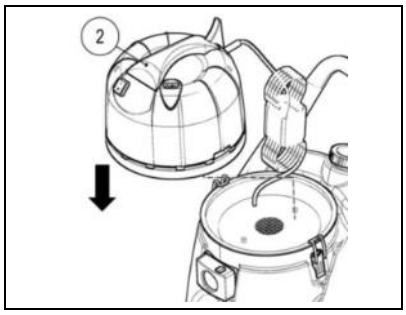

7. Fix the vacuum head to the collection tank by coupling the hooks (1) on the side of the tank. Rotate the levers as shown by the arrow in the picture on the right.

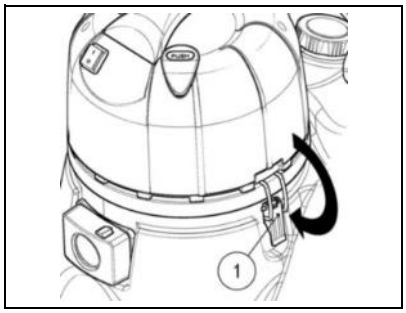

8. Insert the plug (3) of the power cable (4) in the mains socket (5).

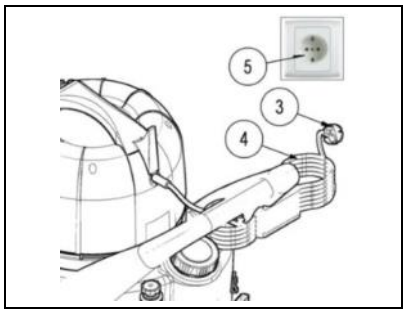

9. Switch on the machine by bringing the main switch (6) to the work position “I”.
10. Carry out the cleaning work.

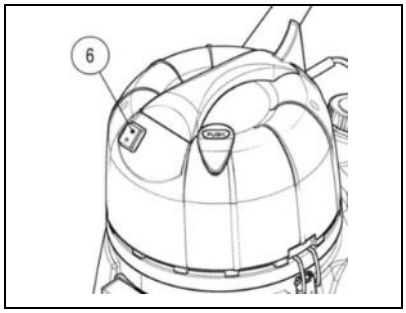

ATTENTION: if the vacuuming intensity diminishes while you are working, read “IMPROVING THE VACUUMING CAPACITY”.

The machine is fitted with a mechanical device (float) under the vacuum lid. When the collection tank is full, this device shuts off the air to the vacuum motor to protect it; you will recognise this condition by the deeper noise made by the motor. When you hear this sound, you must empty the collection tank (read “EMPTYING THE COLLECTION TANK”).

16. WET VACUUM CLEANER WITH OPTIONAL FRONT SQUEEGEE KIT

To start working as a wet vacuum cleaner with the optional front squeegee kit, proceed as follows:

1. Make all the checks indicated in "PREPARING THE MACHINE".
2. Free the vacuum head from the collection tank by releasing the hooks (1) on the side of the tank. Rotate the levers as shown by the arrow in the picture on the right.

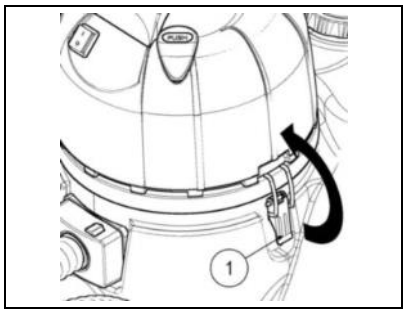

3. Use the handle (2) on the vacuum head unit to remove it from the collection tank.
4. Rest the head carefully on the ground.

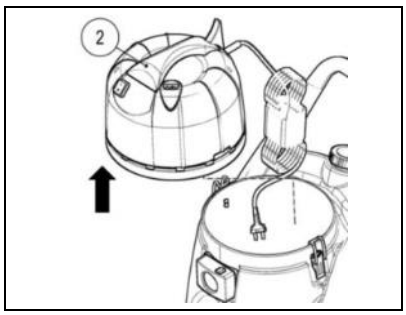

5. Make sure the float unit is inserted in the collection tank. If this is not the case, position it correctly.

ATTENTION: there must be no solid waste residue inside the collection tank.

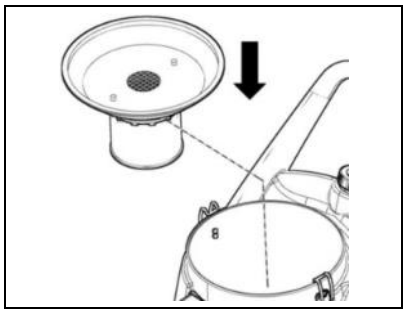

6. Use the handle (2) on the vacuum head unit to position it above the collection tank.Make sure the machine's power supply cable is in the rear part of the tank.

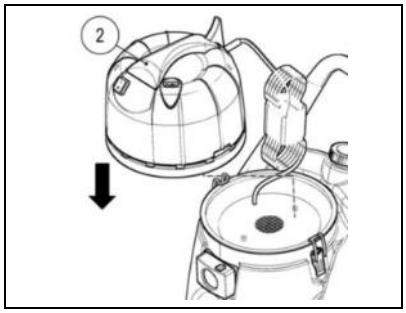

7. Fix the vacuum head to the collection tank by coupling the hooks (1) on the side of the tank. Rotate the levers as shown by the arrow in the picture on the right.

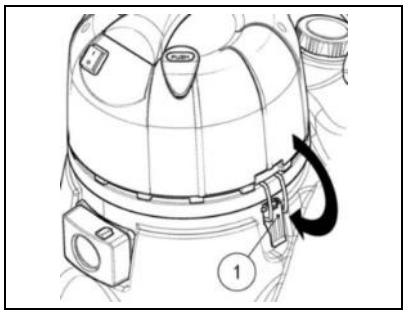

8. Insert the plug (3) of the power supply cable (4) in the mains socket (5).

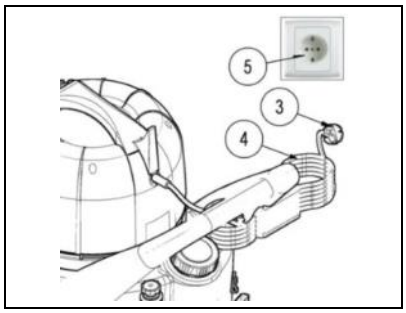

9. Switch on the machine by bringing the main switch (6) to the work position “I”.

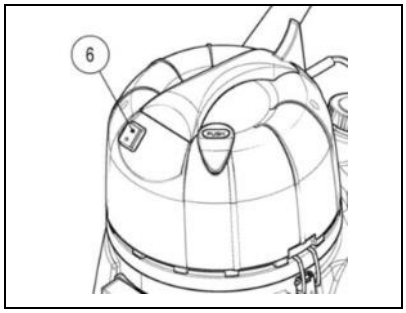

10. Bring the front squeegee into contact with the ground by lightly pressing downwards on the squeegee command pedal (7) then moving it to the left just enough to release it from its restraint.
11. Carry out the cleaning work.

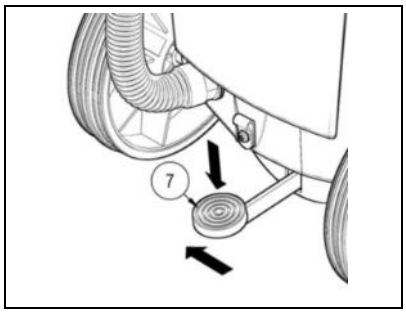

ATTENTION: if the vacuuming intensity diminishes while you are working, read “IMPROVING THE VACUUMING CAPACITY”.

The machine is fitted with a mechanical device (float) under the vacuum lid. When the collection tank is full, this device shuts off the air to the vacuum motor to protect it; you will recognise this condition by the deeper noise made by the motor. When you hear this sound, you must empty the collection tank (read “EMPTYING THE COLLECTION TANK”).

17. IMPROVING THE VACUUMING CAPACITY

If the vacuuming capacity diminishes while you are working, proceed as follows:

1. With the accessory in contact with the ground, quickly press the button (1) on the vacuum head 3 or 4 times.
2. Recommence work.

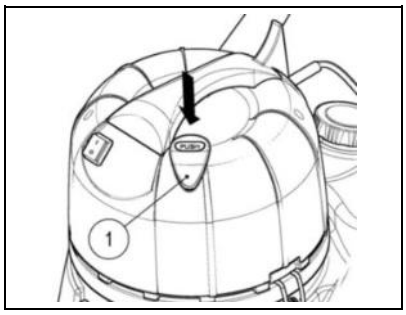

If the above procedure doesn't produce a good result, proceed as follows:

1. Switch the machine off via the main switch (2) on the vacuum head (bring the switch to “0”).

2. Press the button (3) on the vacuum nozzle (4).
3. Remove the vacuum hose from the hole (6) on the vacuum nozzle.

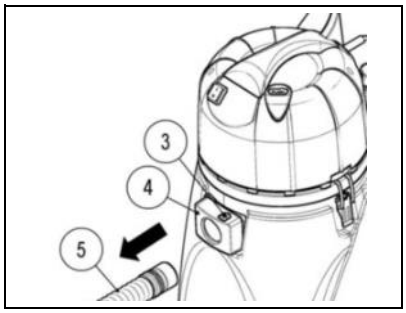

4. Switch the machine on via the main switch (2) on the vacuum head (bring the switch to “I”).
5. Close the hole on the vacuum nozzle (4) with one hand, and quickly press the button (1) on the vacuum head 3 or 4 times.

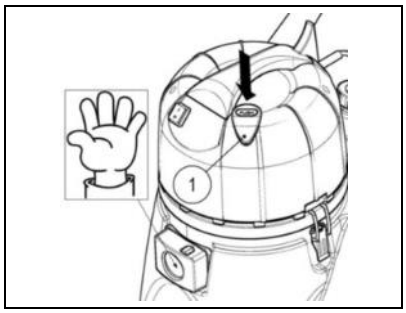

6. Switch the machine off via the main switch (2) on the vacuum head (bring the switch to “0”).

7. Press the button (3) on the vacuum nozzle (4).
8. Insert the vacuum hose in the hole (6) on the vacuum nozzle.
9. Recommence work.

If the above procedure doesn't produce a good result, proceed as indicated in the “INSUFFICIENT VACUUM” section in “TROUBLESHOOTING”.

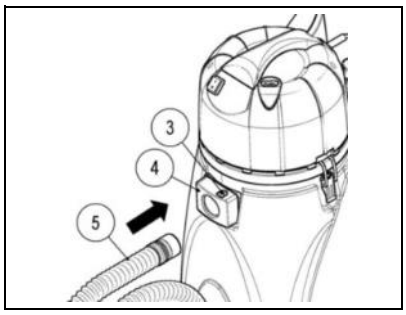

AT THE END OF THE WORK

At the end of the work, and before carrying out any type of maintenance, perform the following operations:

1. Make sure the machine is in a safe condition (read "MACHINE SAFETY").
2. Take the machine to the designated collection tank emptying place.
3. Empty the collection tank (read "EMPTYING THE COLLECTION TANK").

ATTENTION: the place designated for this purpose must comply with the current environmental protection regulations.

4. Remove the accessory from the extension. Clean it under running water and place it in the object-holder pocket.
5. Remove the female part of the extension from the male part. Clean it under running water and place it in the object-holder pocket.
6. Remove the extension from the nozzle in the vacuum hose. Clean it under running water and place it in the object-holder pocket.

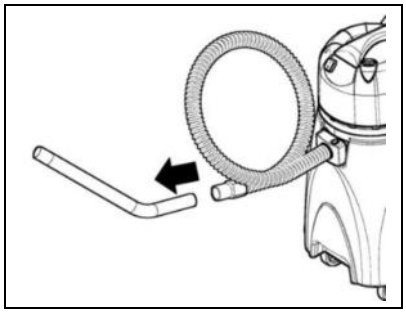

7. Press the button (5) on the vacuum nozzle.
8. Remove the vacuum hose from the hole (6) on the vacuum nozzle. Clean it under running water and wind it around the handlebar.

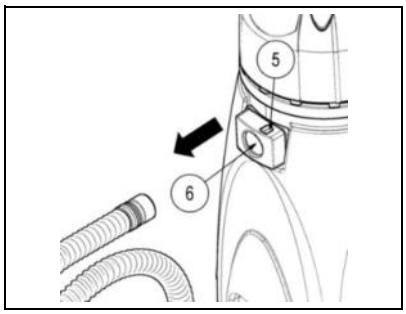

9. Remove the front squeegee (if fitted) and clean off any impurities (read "CLEANING THE FRONT SQUEEGEE (OPTIONAL)").

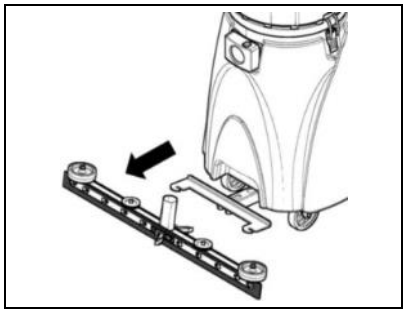

10. Take the machine to its designated storage place.

ATTENTION: park the machine in an enclosed place, on a flat surface. There must be no objects nearby that could either damage it, or be damaged through contact with it.

PERFORM ALL MAINTENANCE OPERATIONS IN SEQUENCE

18. EMPTYING THE COLLECTION TANK

To remove solid waste from the collection tank, proceed as follows:

1. Take the machine to the designated recovery tank drainage place.
2. Make sure the machine is in a safe condition (read "MACHINE SAFETY").

ATTENTION: you are advised to always wear protective gloves, to avoid the risk of serious injury to your hands.

3. Free the vacuum head from the collection tank by releasing the hooks (5) on the side of the tank. Rotate the levers as shown by the arrow in the picture on the right.

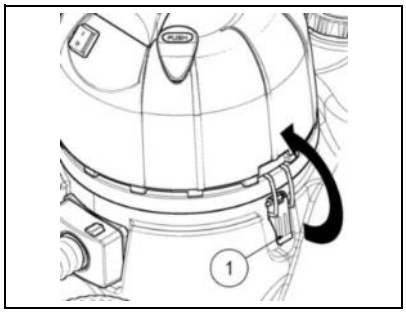

4. Use the handle (2) on the vacuum head unit to remove it from the collection tank.
5. Rest the head carefully on the ground.

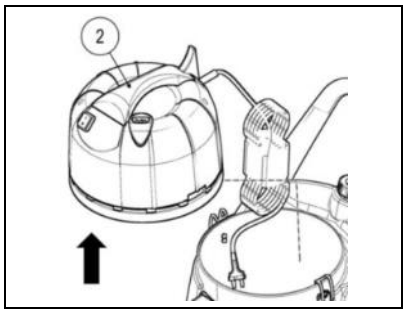

6. Using the handle, rotate the collection tank until the handle is touching the ground.
7. Remove the dirt from the collection tank.

ATTENTION: remember to place the dirt collection container on the ground before emptying out the dirt.

8. Repeat the operations in reverse order to reassemble all the parts.

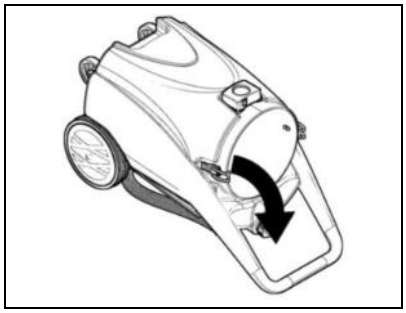

To remove liquid waste from the collection tank, proceed as follows:

1. Take the machine to the designated recovery tank drainage place.
2. Make sure the machine is in a safe condition (read "MACHINE SAFETY").

ATTENTION: you are advised to always wear protective gloves, to avoid the risk of serious injury to your hands.

3. Remove the collection tank vent cap (1) by rotating it anticlockwise.

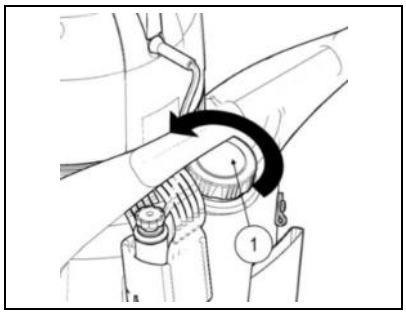

4. Remove the collection tank drainage tube (2) (on the back of the machine) from its restraint.
5. Put the tube on the drainage surface and unscrew the cap.

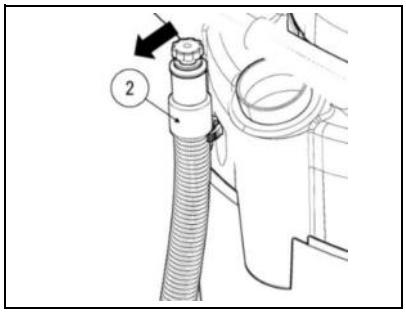

ATTENTION: the place designated for this purpose must comply with the current environmental protection regulations.

6. Repeat the operations in reverse order to reassemble all the parts.

To remove the paper filter/collection bag, proceed as follows:

1. Take the machine to the designated recovery tank drainage place.
2. Make sure the machine is in a safe condition (read "MACHINE SAFETY").

ATTENTION: you are advised to always wear protective gloves, to avoid the risk of serious injury to your hands.

3. Free the vacuum head from the collection tank by releasing the hooks (5) on the side of the tank. Rotate the levers as shown by the arrow in the picture on the right.

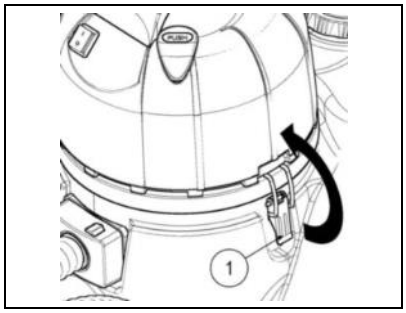

4. Use the handle (2) on the vacuum head unit to remove it from the collection tank.
5. Rest the head carefully on the ground.

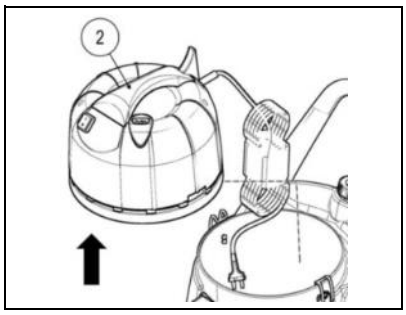

6. Taking care not to tear the paper bag, remove it from inside the collection tank.

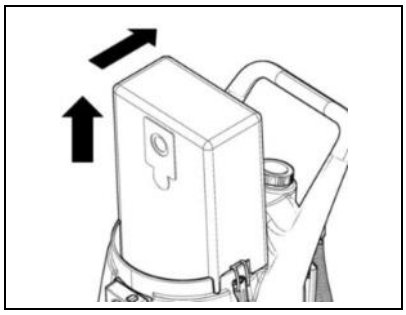

ATTENTION: the filter/collection bag must only be removed when it is completely full.

19. CLEANING THE ACCESSORIES

The good condition of the accessories ensures better vacuuming and floor cleaning, as well as a longer working life for the vacuum motor. To clean the accessories, proceed as follows:

1. Take the machine to the maintenance area.
2. Make sure the machine is in a safe condition (read "MACHINE SAFETY").

ATTENTION: you are advised to always wear protective gloves, to avoid the risk of serious injury to your hands.

3. Remove the accessory from the extension. Clean it under running water and place it in the object-holder pocket.
4. Remove the female part of the extension from the male part. Clean it under running water and place it in the object-holder pocket.
5. Remove the extension from the nozzle in the vacuum hose. Clean it under running water and place it in the object-holder pocket.

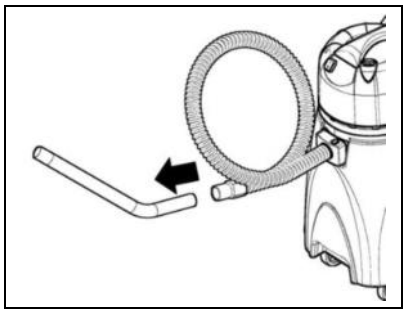

6. Press the button (1) on the vacuum nozzle.
7. Remove the vacuum hose (2) from the hole on the vacuum nozzle (3).
8. Clean the vacuum hose under running water to remove any objects that might prevent the accessory from working properly.
9. Repeat the operations in reverse order to reassemble all the parts.

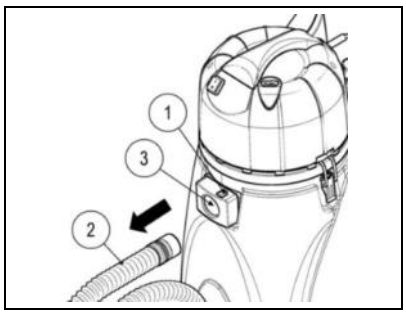

20. CLEANING THE FRONT SQUEEGEE (OPTIONAL)

The careful cleaning of the whole vacuum unit ensures better drying and cleaning of the floor as well as a longer vacuum motor life. To carry out the cleaning of the squeegee unit, proceed as follows:

1. Take the machine to the maintenance area.
2. Make sure the machine is in a safe condition (read "MACHINE SAFETY").

3. Bring the front squeegee to its resting position by lightly pressing downwards on the squeegee command pedal (1) then moving it to the right just enough to hook it up to its restraint.

ATTENTION: you are advised to always wear protective gloves, to avoid the risk of serious injury to your hands.

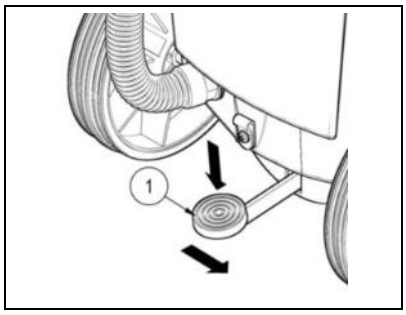

4. Remove the vacuum hose (2) of the squeegee from the relative joint (3) of the vacuum nozzle.

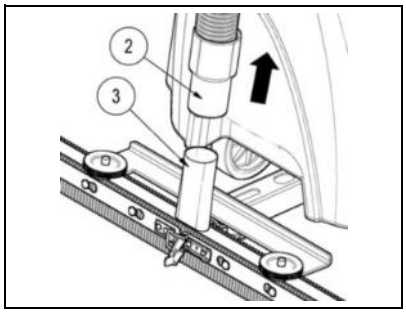

5. Loosen the handwheel (4) of the right-hand pin (5) on the squeegee.
6. Repeat the same operation also for the left pin.

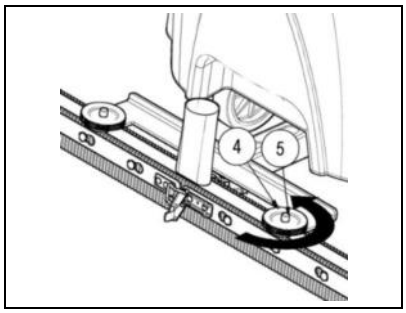

7. Remove the squeegee from its support.

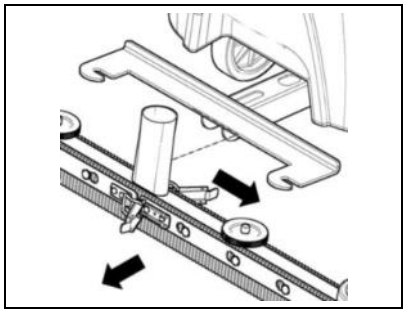

8. Thoroughly clean the rear rubber blades (6) of the squeegee, first with a jet of water and then with a damp cloth.
9. Check the state of wear of the rubber blades (6) of the squeegee. If the blade edge in contact with the floor is worn, replace it - read "REPLACING THE RUBBER BLADES OF THE FRONT SQUEEGEE (OPTIONAL)".

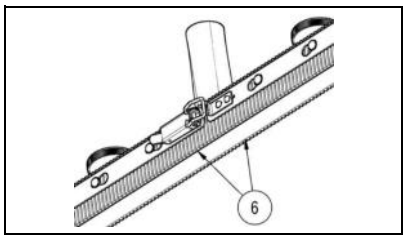

10. Thoroughly clean the vacuum chamber of the squeegee, first with a jet of water and then with a damp cloth.

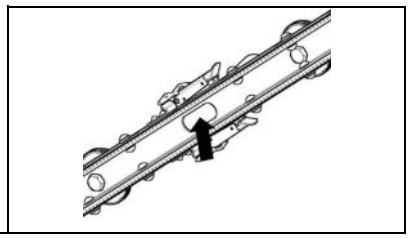

21. CLEANING THE COLLECTION TANK

The thorough cleaning of the collection tank will ensure a longer working life for the machine. To clean the tank, proceed as follows:

1. Take the machine to the designated maintenance area.
2. Make sure the machine is in a safe condition (read "MACHINE SAFETY").

3. Free the vacuum head from the collection tank by releasing the hooks (5) on the side of the tank. Rotate the levers as shown by the arrow in the picture on the right.

ATTENTION: you are advised to always wear protective gloves, to avoid the risk of serious injury to your hands.

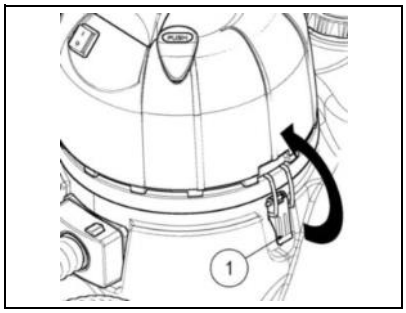

4. Use the handle (2) on the vacuum head unit to remove it from the collection tank.
5. Rest the head carefully on the ground.

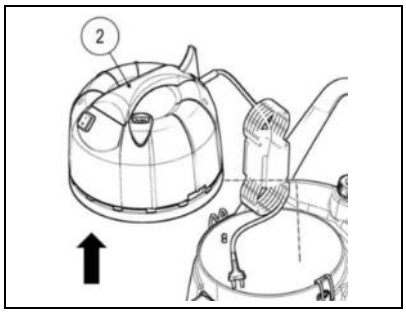

6. Remove the collection tank vent cap (3) by rotating it anticlockwise.

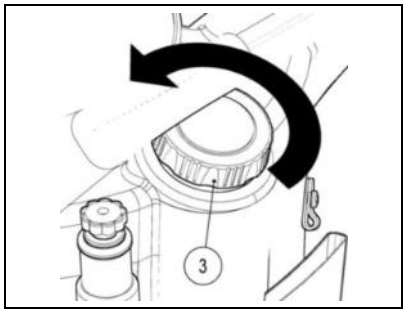

7. Using the handle, rotate the collection tank until the handle is touching the ground.
8. With a jet of water, continue cleaning the inside of the collection tank.
9. Repeat the operations in reverse order to reassemble all the parts.

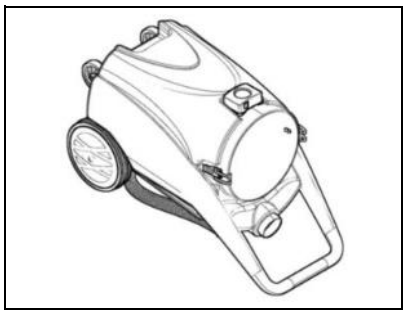

22. CLEANING THE SPONGE FILTER

The thorough cleaning of the sponge filter will ensure a longer working life for the machine. To clean the sponge filter, proceed as follows:

1. Take the machine to the designated maintenance area.
2. Make sure the machine is in a safe condition (read "MACHINE SAFETY").

3. Free the vacuum head from the collection tank by releasing the hooks (1) on the side of the tank. Rotate the levers as shown by the arrow in the picture on the right.

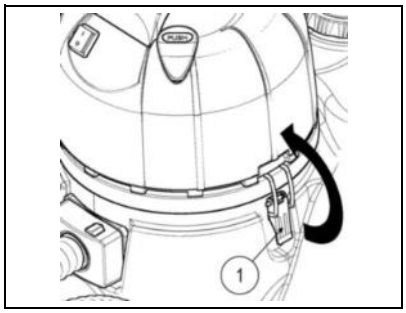

ATTENTION: you are advised to always wear protective gloves, to avoid the risk of serious injury to your hands.

4. Use the handle (2) on the vacuum head unit to remove it from the collection tank.
5. Rest the head carefully on the ground.

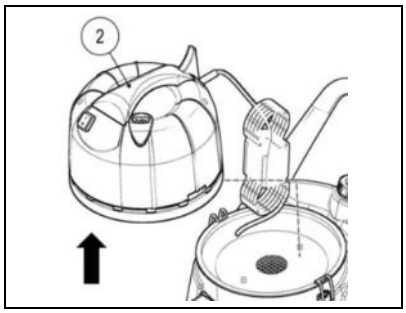

6. Remove the float unit from the collection tank.

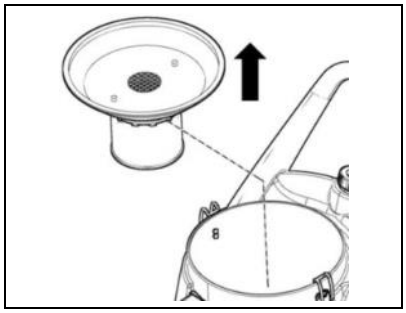

7. Remove the sponge filter (3) from the float kit.
8. Clean it with detergent and warm water.
9. Repeat the operations in reverse order to reassemble all the parts.

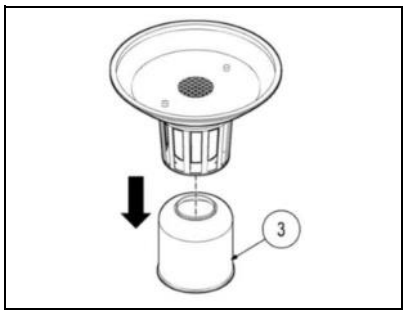

ATTENTION: check the state of wear of the sponge filter. If the filter surface area is particularly obstructed or is damaged, replace it - read "REPLACING THE SPONGE FILTER".

23. CLEANING THE CARTRIDGE FILTER

The thorough cleaning of the cartridge filter will ensure a longer working life for the machine. To clean the filter, proceed as follows:

1. Take the machine to the designated maintenance area.
2. Make sure the machine is in a safe condition (read "MACHINE SAFETY").

3. Free the vacuum head from the collection tank by releasing the hooks (1) on the side of the tank. Rotate the levers as shown by the arrow in the picture on the right.

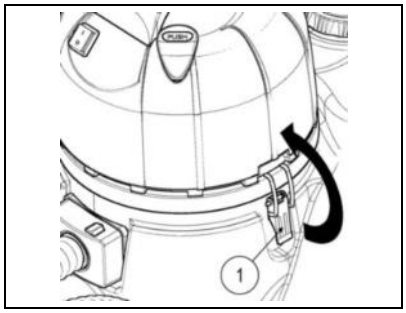

ATTENTION: you are advised to always wear protective gloves, to avoid the risk of serious injury to your hands.

4. Use the handle (2) on the vacuum head unit to remove it from the collection tank.
5. Rest the head carefully on the ground.

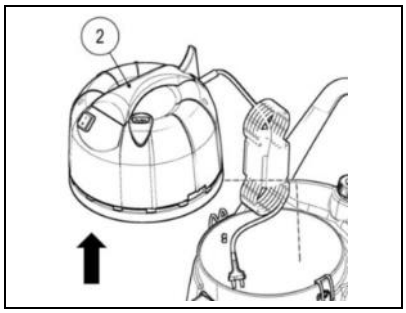

6. Rotating the handwheel (3) anticlockwise, remove the cartridge filter support (4).

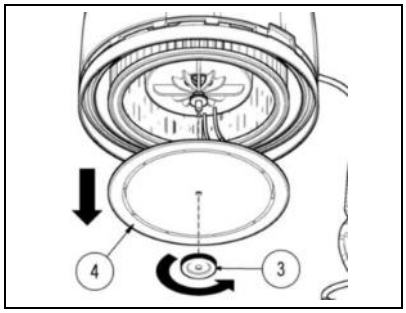

7. Remove the cartridge filter (5) from the vacuum head.
8. Clean the panel filter with an air jet from a distance of more than 20cm.
9. Repeat the operations in reverse order to reassemble all the parts.

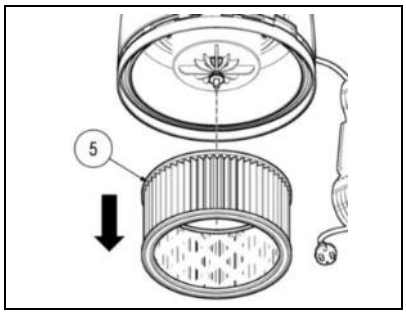

ATTENTION: check the state of wear of the cartridge filter. If the filter surface area is particularly obstructed or is damaged, replace it - read "REPLACING THE CARTRIDGE FILTER".

24. CLEANING THE FLOAT

The thorough cleaning of the float will ensure a longer working life for the machine. To clean it, proceed as follows:

1. Take the machine to the designated maintenance area.
2. Make sure the machine is in a safe condition (read "MACHINE SAFETY").

3. Free the vacuum head from the collection tank by releasing the hooks (1) on the side of the tank. Rotate the levers as shown by the arrow in the picture on the right.

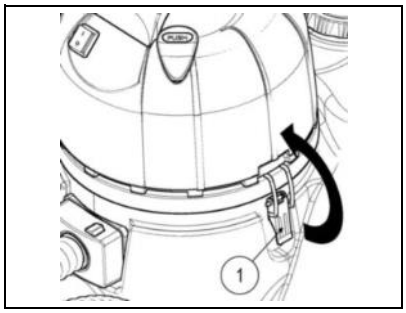

ATTENTION: you are advised to always wear protective gloves, to avoid the risk of serious injury to your hands.

4. Use the handle (2) on the vacuum head unit to remove it from the collection tank.
5. Rest the head carefully on the ground.

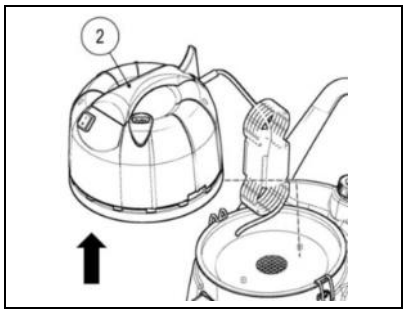

6. Remove the float unit from the collection tank.

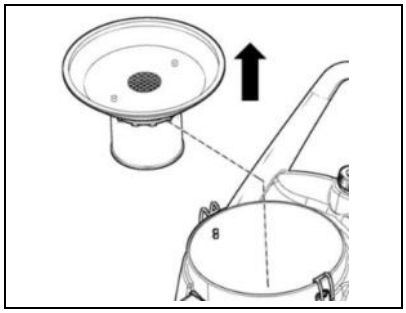

7. Remove the sponge filter (3) from the float kit.
8. Thoroughly clean the float (4), first with a jet of water and then with a damp cloth.
9. Repeat the operations in reverse order to reassemble all the parts.

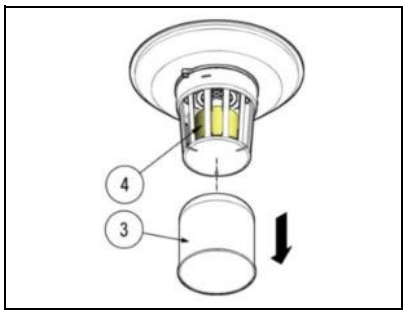

25. CLEANING THE PERMANENT FABRIC FILTER (OPTIONAL)

The thorough cleaning of the permanent fabric filter will ensure a longer working life for the machine. To clean the filter, proceed as follows:

1. Take the machine to the designated maintenance area.
2. Make sure the machine is in a safe condition (read "MACHINE SAFETY").

3. Free the vacuum head from the collection tank by releasing the hooks (1) on the side of the tank. Rotate the levers as shown by the arrow in the picture on the right.

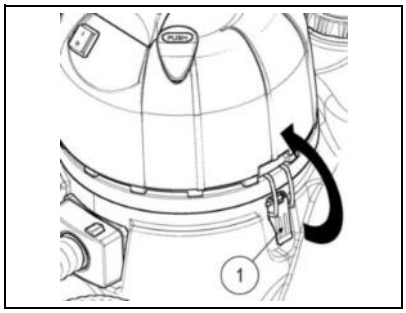

ATTENTION: you are advised to always wear protective gloves, to avoid the risk of serious injury to your hands.

4. Use the handle (2) on the vacuum head unit to remove it from the collection tank.
5. Rest the head carefully on the ground.

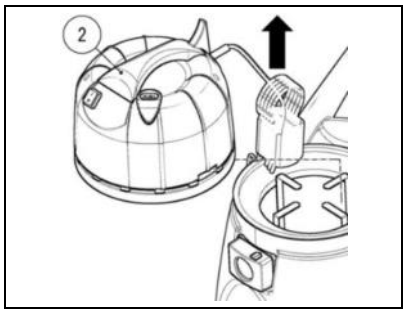

6. Remove the filter tensioner (3) from the collection tank, and rest it on the ground.

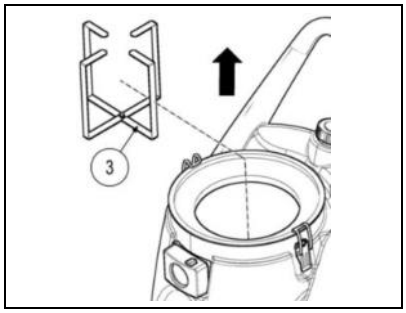

7. Remove the permanent fabric filter (4) from the collection tank.
8. Clean it with detergent and warm water.
9. Repeat the operations in reverse order to reassemble all the parts.

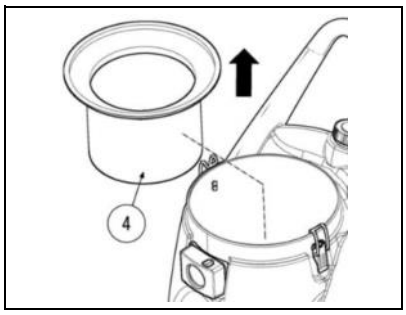

ATTENTION: check the state of wear of the permanent fabric filter. If the filter surface area is particularly obstructed or is damaged, replace it - read "REPLACING THE PERMANENT FABRIC FILTER (OPTIONAL)".

26. CLEANING THE NYLON FILTER (OPTIONAL)

The thorough cleaning of the nylon filter will ensure a longer working life for the machine. To clean the filter, proceed as follows:

1. Take the machine to the designated maintenance area.
2. Make sure the machine is in a safe condition (read "MACHINE SAFETY").

3. Free the vacuum head from the collection tank by releasing the hooks (1) on the side of the tank. Rotate the levers as shown by the arrow in the picture on the right.

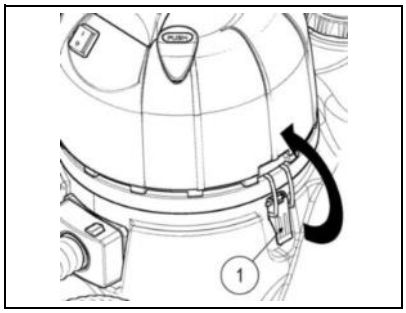

ATTENTION: you are advised to always wear protective gloves, to avoid the risk of serious injury to your hands.

4. Use the handle (2) on the vacuum head unit to remove it from the collection tank.
5. Rest the head carefully on the ground.

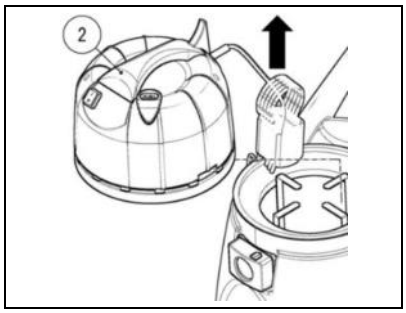

6. Remove the filter tensioner (3) from the collection tank, and rest it on the ground.

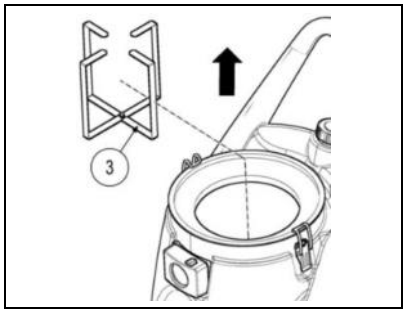

7. Remove the permanent fabric filter (4) from the collection tank.

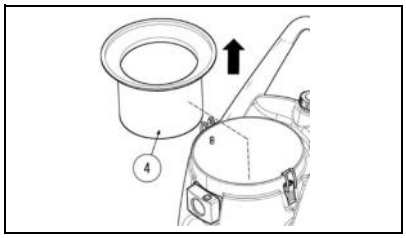

8. Remove the nylon filter (5) from the collection tank.
9. Clean it with detergent and warm water.
10. Repeat the operations in reverse order to reassemble all the parts.

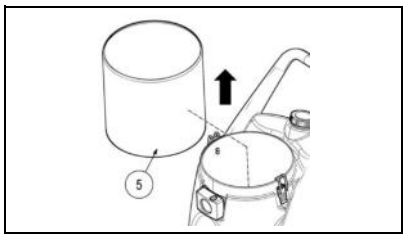

ATTENTION: check the state of wear of the nylon filter. If the filter surface area is particularly obstructed or is damaged, replace it - read "REPLACING THE NYLON FILTER (OPTIONAL)".

27. REPLACING THE SPONGE FILTER

The good operation of the sponge filter will ensure a longer working life for the machine. To replace the filter, proceed as follows:

1. Take the machine to the designated maintenance area.
2. Make sure the machine is in a safe condition (read "MACHINE SAFETY").

3. Free the vacuum head from the collection tank by releasing the hooks (1) on the side of the tank. Rotate the levers as shown by the arrow in the picture on the right.

ATTENTION: you are advised to always wear protective gloves, to avoid the risk of serious injury to your hands.

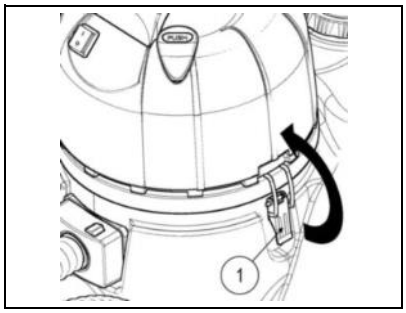

4. Use the handle (2) on the vacuum head unit to remove it from the collection tank.
5. Rest the head carefully on the ground.

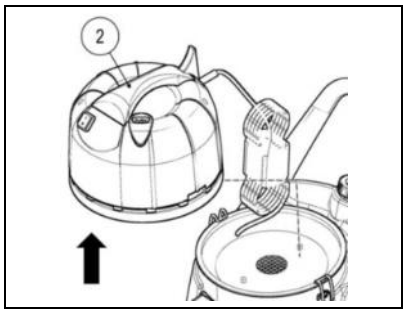

6. Remove the float unit from the collection tank.

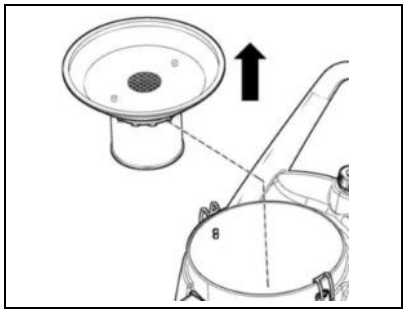

7. Remove the sponge filter (3) from the float kit.
8. Replace it with the new filter, then repeat the operations in reverse order to reassemble all the parts.

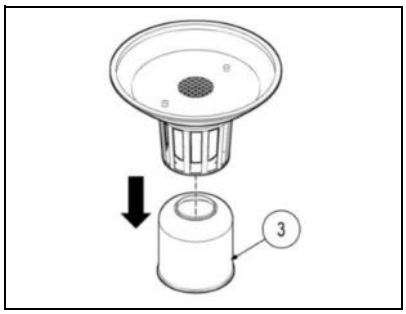

28. REPLACING THE CARTRIDGE FILTER

The good operation of the cartridge filter will ensure a longer working life for the machine. To replace the filter, proceed as follows:

1. Take the machine to the designated maintenance area.
2. Make sure the machine is in a safe condition (read "MACHINE SAFETY").

3. Free the vacuum head from the collection tank by releasing the hooks (1) on the side of the tank. Rotate the levers as shown by the arrow in the picture on the right.

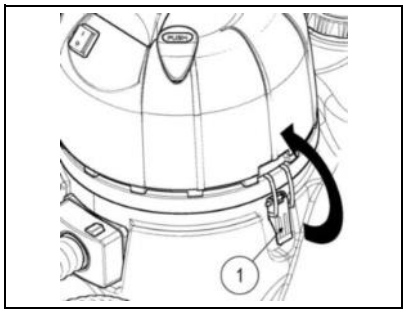

ATTENTION: you are advised to always wear protective gloves, to avoid the risk of serious injury to your hands.

4. Use the handle (2) on the vacuum head unit to remove it from the collection tank.
5. Rest the head carefully on the ground.

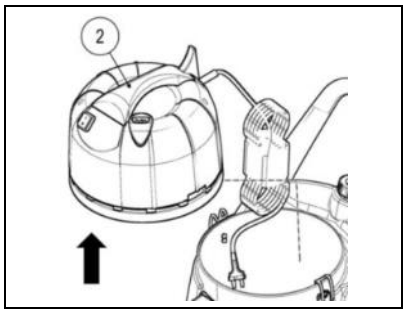

6. Rotating the handwheel (3) anticlockwise, remove the cartridge filter support (4).

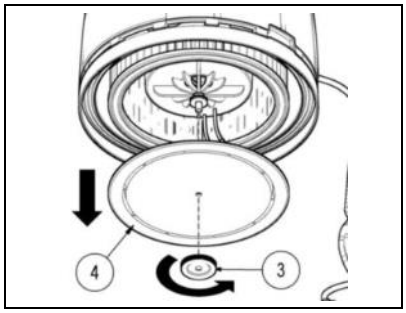

7. Remove the cartridge filter (5) from the vacuum head.
8. Replace it with the new filter, then repeat the operations in reverse order to reassemble all the parts.

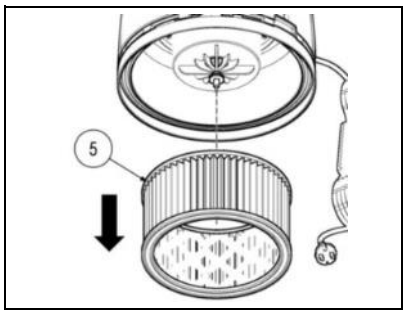

29. REPLACING THE PERMANENT FABRIC FILTER (OPTIONAL)

The good operation of the permanent fabric filter will ensure a longer working life for the machine. To replace the filter, proceed as follows:

1. Take the machine to the designated maintenance area.
2. Make sure the machine is in a safe condition (read "MACHINE SAFETY").

3. Free the vacuum head from the collection tank by releasing the hooks (1) on the side of the tank. Rotate the levers as shown by the arrow in the picture on the right.

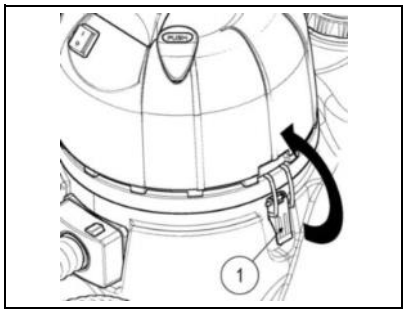

ATTENTION: you are advised to always wear protective gloves, to avoid the risk of serious injury to your hands.

4. Use the handle (2) on the vacuum head unit to remove it from the collection tank.
5. Rest the head carefully on the ground.

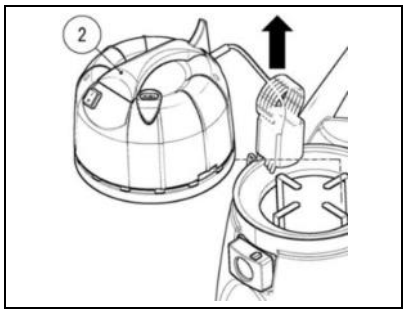

6. Remove the filter tensioner (3) from the collection tank, and rest it on the ground.

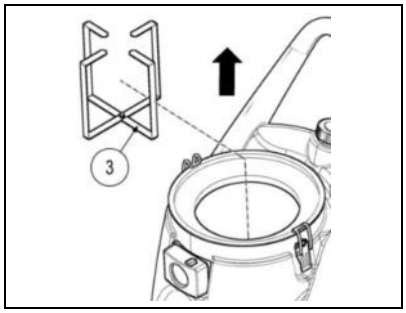

7. Remove the permanent fabric filter (4) from the collection tank.
8. Replace it with the new filter, then repeat the operations in reverse order to reassemble all the parts.

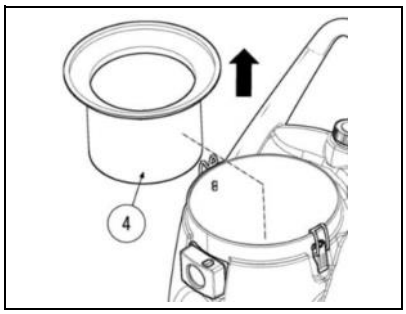

30. REPLACING THE NYLON FILTER (OPTIONAL)

The good operation of the nylon filter will ensure a longer working life for the machine. To replace the filter, proceed as follows:

1. Take the machine to the designated maintenance area.
2. Make sure the machine is in a safe condition (read "MACHINE SAFETY").

3. Free the vacuum head from the collection tank by releasing the hooks (1) on the side of the tank. Rotate the levers as shown by the arrow in the picture on the right.

ATTENTION: you are advised to always wear protective gloves, to avoid the risk of serious injury to your hands.

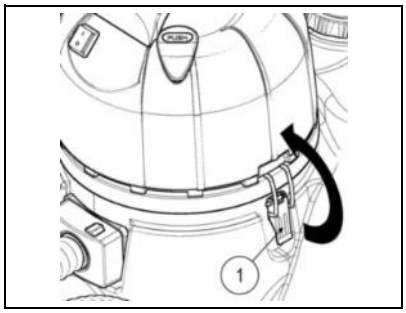

4. Use the handle (2) on the vacuum head unit to remove it from the collection tank.
5. Rest the head carefully on the ground.

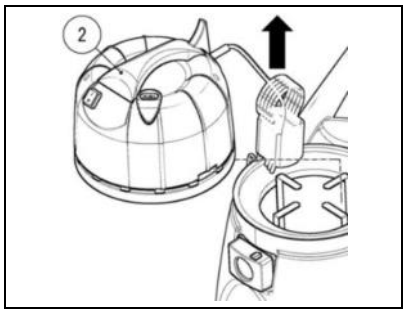

6. Remove the filter tensioner (3) from the collection tank, and rest it on the ground.

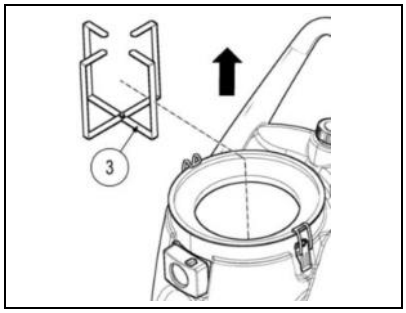

7. Remove the permanent fabric filter (4) from the collection tank.

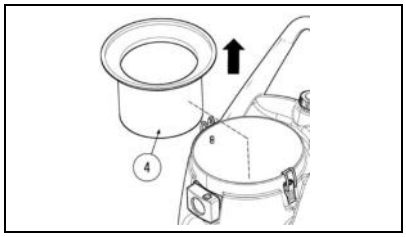

8. Remove the nylon filter (5) from the collection tank.
9. Clean it with detergent and warm water.
10. Repeat the operations in reverse order to reassemble all the parts.

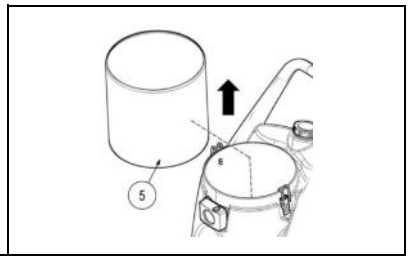

31. REPLACING THE RUBBER BLADES OF THE FRONT SQUEEGEE (OPTIONAL)

The good operation of the whole vacuum unit ensures better drying and cleaning of the floor, as well as a longer vacuum motor life. To replace the squeegee rubbers, proceed as follows:

1. Take the machine to the maintenance area.
2. Make sure the machine is in a safe condition (read "MACHINE SAFETY").

3. Bring the front squeegee to its resting position by lightly pressing downwards on the squeegee command pedal (1) then moving it to the right just enough to hook it up to its restraint.

ATTENTION: you are advised to always wear protective gloves, to avoid the risk of serious injury to your hands.

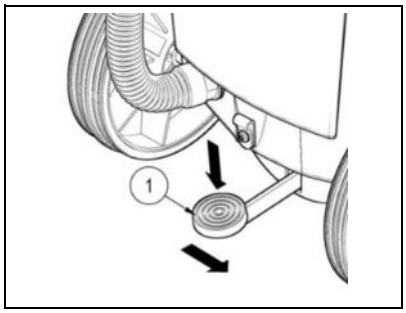

4. Remove the vacuum hose (2) of the squeegee from the relative joint (3) of the vacuum nozzle.

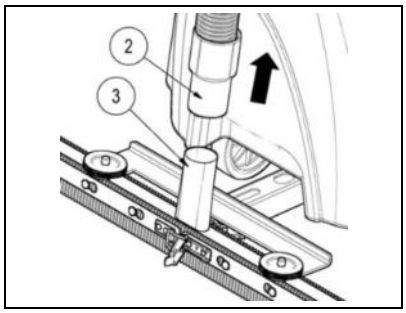

5. Loosen the handwheel (4) of the right-hand pin (5) on the squeegee.
6. Repeat the same operation also for the left pin.

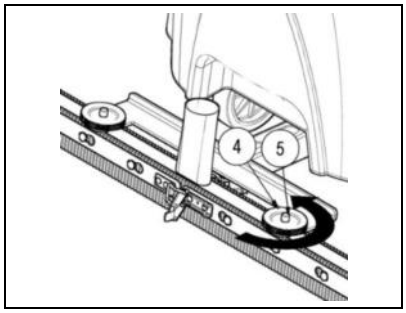

7. Remove the squeegee from its support.

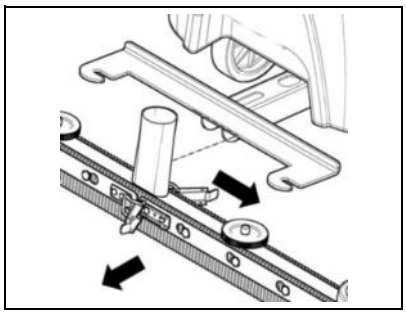

EXTRAORDINARY MAINTENANCE

Proceed as follows for replacing the front rubber blade of the squeegee body:

1. Release the hinge (6) on the front part of the squeegee.

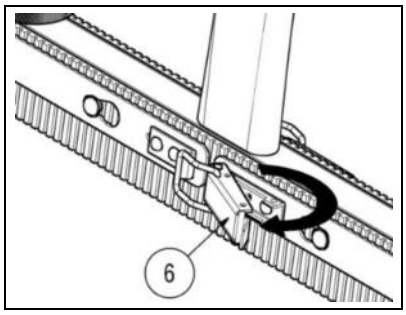

2. Slide the rubber-pressing blades (7) outwards to free the squeegee rubber.
3. Remove the rubber (8) and replace it.
4. Proceed in reverse to replace the rubber.

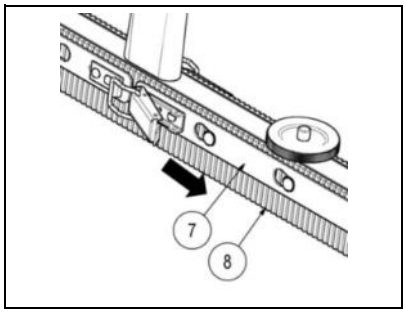

ATTENTION: remember that the correct position for the front rubber is with its flat surface in contact with the squeegee.

Proceed as follows for replacing the rear rubber blade of the squeegee body:

1. Release the hinge (9) on the front part of the squeegee.

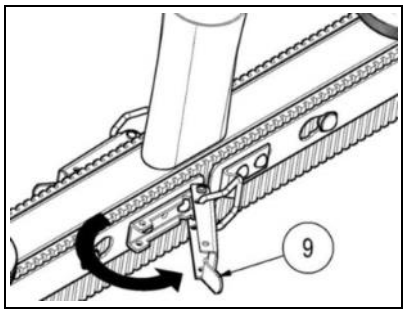

2. Slide the rubber-pressing blades (10) outwards to free the squeegee rubber.
3. Remove the rubber (11) and replace it.
4. Proceed in reverse to replace the rubber.

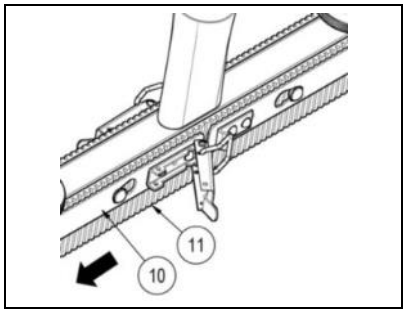

ATTENTION: remember that the correct position for the front rubber is with its flat surface in contact with the squeegee.

32. THE MACHINE DOES NOT SWITCH ON

If the machine does not switch on, check the following:

1. Make sure the main switch is on "I".

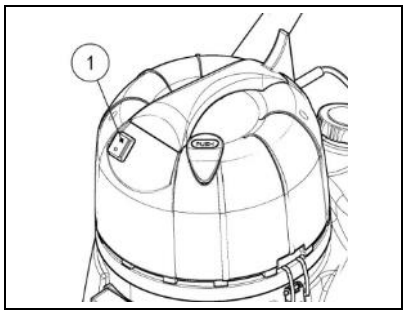

2. Make sure the plug (2) on the power supply cable (3) is correctly inserted in the mains socket (4). If necessary, connect it.

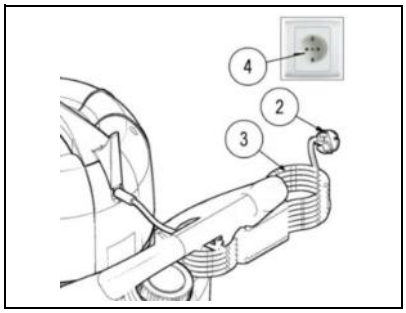

3. Make sure the electronic specifications of the machine correspond with those of the mains supply (check the technical data on the serial number plate).
4. Make sure the collection tank is not full of liquid substances. If it is, empty it (read "EMPTYING THE COLLECTION TANK").

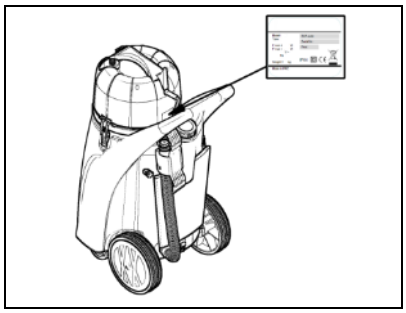

33. INSUFFICIENT VACUUM

If the vacuuming capacity is insufficient, check the following:

1. Make sure the vacuum hose is correctly connected to the nozzle on the collection tank.
2. Make sure the vacuum hose is correctly connected to the accessory being used.
3. Make sure there are no impurities blocking the vacuum hose.
4. Make sure there are no impurities blocking the vacuum chamber of the accessory being used.
5. Make sure the cartridge filter is not dirty (read "IMPROVING THE VACUUMING CAPACITY" and, if this is not sufficient, "CLEANING THE CARTRIDGE FILTER").
6. If you are removing liquids, make sure the sponge filter is not dirty (read "IMPROVING THE VACUUMING CAPACITY" and, if this is not sufficient, "CLEANING THE SPONGE FILTER").
7. Make sure the secondary filters (sponge, permanent fabric or nylon) are not dirty (if necessary, clean them - read "CLEANING THE SPONGE FILTER" or "CLEANING THE PERMANENT FABRIC FILTER (OPTIONAL)" or "CLEANING THE NYLON FILTER (OPTIONAL)" depending on the type).

DISPOSAL

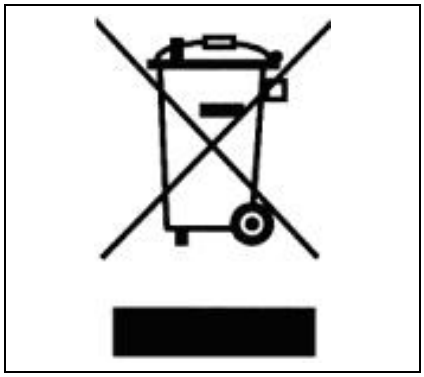

To dispose of the machine, take it to a demolition centre or an authorised collection centre.

Before scrapping the machine, it is necessary to remove and separate out the following materials, then send them to the appropriate collection centres in accordance with the environmental hygiene regulations currently in force:

- Felt
- Electric and electronic parts*
- Plastic parts (tanks and handlebars)
- Metal parts (levers and frame)

(*) In particular, contact your local distributor when scrapping electric and electronic parts.

CHOOSING AND USING THE ACCESSORIES

Flat lance:
when you need to vacuum in fissures or very narrow gaps.

Brush with bristles:
for removing solid waste from surfaces where you want to not only vacuum but also dust.

Flexible vacuum hose:
for connecting the extensions to the collection tank.

"S"-shaped extensions in steel:
a pair of steel pipes for supporting the accessories and control handles. Can be used when working on floors.

Brush with bristles:
for vacuuming solid waste on hard surfaces.

Brush for liquids:
to be used for removing liquid substances only.

Plastic extensions:
a pair of plastic pipes for supporting the accessories and control handles.Ideal for vacuuming on vertical or high surfaces.

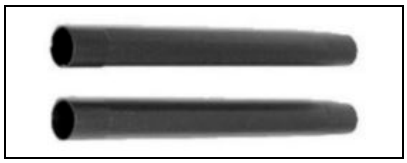

Float filter kit:
this is the vacuum motor filtering system and the warning that the maximum collection tank capacity has been reached. to be used for removing liquid substances only.

Cartridge filter:
the filter of the vacuum motor. It must always be used, for every type of machine use.

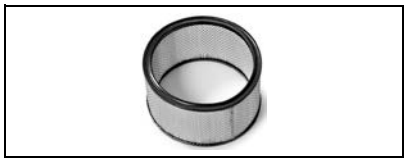

Brush without bristles (optional):
for soft surfaces (e.g. carpet).

CHOOSING AND USING THE ACCESSORIES

Front squeegee kit (optional):
an optional kit, to be used only for vacuuming large amounts of liquid substances.

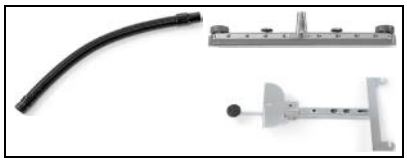

Paper filter/collection bag (disposable):
for collecting solid waste. Facilitates waste disposal.

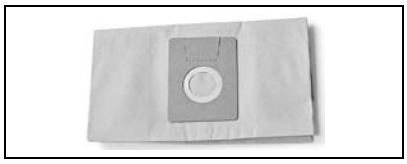

Nylon filter (optional):
for collecting damp solid waste. Must only be used together with the filter/float kit or the permanent fabric filter.

Fabric filter (optional):
for collecting dry solid waste. Must only be used together with the filter tensioner support.

HEPA cartridge filter (optional):
vacuum motor filter with a type of material that traps a large quantity of very small particles that other materials would simply channel back into the work environment air.

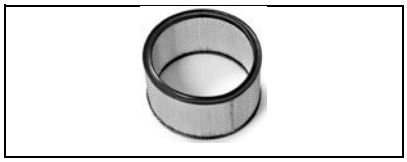

EC DECLARATION OF CONFORMITY

DRY VACUUM CLEANER AND WET VACUUM
CLEANER model **A201001**

comply with the requirements of the following Directives:

- 2006/42/EC: Machinery Directive
- 2006/95/EC: Low Voltage Directive
- 2004/108/EC: Electromagnetic Compatibility Directive

They also comply with the following standards:

- EN 60335-1: Safety of electrical appliances for domestic and similar use - Safety. Part 1: Generic standards.
- EN 60335-2-69. Safety of electrical appliances for domestic and similar use - Part 2: Special standards for devices designed for cleaning wet and dry floors (including motor-equipped brushes), for industrial and collective use
- EN 61000-3-2: Electromagnetic compatibility (EMC) - Part 3-2: Limits – Limits for harmonic current emissions (equipment with input current <= 16A per phase)
- EN 61000-3-3: Electromagnetic compatibility (EMC) - Part 3-3: Limits – Restriction of voltage variations and voltage/flicker surges in low voltage power supply systems for devices with a rated current <= 16A per phase and not subject to conditioned 16A connection
- EN 55014-1: Electromagnetic compatibility - Regulations for household appliances, electrical devices and similar equipment - Part 1: Emission
- EN 55014-2: Electromagnetic compatibility - Requisites for household appliances, electrical devices and similar equipment - Part 2: Immunity - Regulation for the product family
- EN 62233: Devices for domestic use and similar - Electromagnetic fields - Methods for evaluation and measurement.

ISOPLAM S.R.L.
Via E. Mattei, 4 – Z. I. Maser (TV) – Italy
Tel. (+39) 0423 925023 - www.isoplam.it
Company certified UNI EN ISO 9001:2015